Tolomatic™
EXCELLENCE IN MOTION

MANUAL

For Installation, Maintenance and Operation

RSH Series Actuators

LINEAR MOTION SOLUTIONS EXPERTS

Tolomatic reserves the right to change the design or operation of the equipment described herein and any associated motion products without notice. Information in this document is subject to change without notice.

Copyright © 2022 Tolomatic, Inc. All rights Reserved.

All brand and product names are trademarks of their respective owners. Information in this document is believed to be accurate at time of publication.

Original Instructions - English
Translations will be supplied in other community languages as required by customers

TABLE OF CONTENTS

TABLE OF CONTENTS **3**

LIST OF FIGURES & TABLES **5**

1: SAFETY **6**

- 1.1 SAFETY SYMBOLS 6
- 1.2 SAFETY CONSIDERATIONS 6
- 1.3 GENERAL INFORMATION 8

2: RSH PRODUCT OVERVIEW **9**

- 2.1 GENERAL DESCRIPTION 9
- 2.2 PRODUCT FEATURES 9
- 2.3 INTENDED USE 9
- 2.3 STORAGE 10
- 2.4 IDENTIFICATION LABEL 10
- 2.5 CERTIFICATION 10
- 2.6 MANUFACTURER 10

3: RSH ACTUATOR PRODUCT CONFIGURATION **11**

- 3.1 RSH CONFIGURATION OVERVIEW: 11
- 3.1.1 RSH SERIES CONFIGURATION 11
- 3.2 STANDARD CONFIGURATIONS AND OPTIONS 11
- 3.3 RSH MOUNTING FEATURES AND OPTIONS 13
- 3.3.1 STANDARD RSH ACTUATOR MOUNTING 13
- 3.3.2 RSH ACTUATOR MOUNTING OPTIONS 13
- 3.3.3 RSH ACTUATOR ROD END OPTIONS 13
- 3.4 SCREW OPTIONS 13
- 3.5 ANTI-ROTATE OPTION 13

4: MECHANICAL INSTALLATION OF RSH ACTUATORS **14**

- 4.1 GENERAL OPERATION 14
- 4.2 ALIGNMENT AND SIDE LOADING: 14
- 4.3 MECHANICAL INSTALLATION INSTRUCTIONS 14
- 4.4 LIFTING AND MOVING 15
- 4.5 ACTUATOR ORIENTATION 16
- 4.6 MOTOR INSTALLATION 16
- 4.6.1 RSH INLINE MOTOR MOUNTING 16
- 4.6.2 RSH REVERSE PARALLEL MOTOR MOUNTING PROCEDURE 16
- 4.6.3 MOTOR PULLEY INSTALLATION 17
- 4.7 STANDARD RSH ACTUATOR MOUNTING 17
- 4.8 OPTIONS 18
- 4.8.1 FFG, ERD (FRONT FLANGE AND DROP IN REPLACEMENT ERD MOUNT) 18
- 4.8.2 FM2 (FOOT MOUNT) 19
- 4.8.3 IET AND MET (ROD END: IMPERIAL AND METRIC EXTERNAL THREADED OPTION) 19

5: RSH OPERATION AND START UP CONSIDERATIONS **21**

- 5.1 BACK DRIVING 21
- 5.2 HOMING 21

- 5.3 Breather Port 21

6: RSH MAINTENANCE 22

- 6.1 Maintenance Check and Intervals 22
- 6.2 Lubrication procedure and interval. 22
- 6.2.1 RSH Lubrication 22
- 6.2.2 Roller Screw Lubrication 22
- 6.3 Wash-down Recommendations 23
- 6.4 Seal Replacement Recommendations 23
- 6.4.1 Application Assumptions for Replacement Interval 23
- 6.4.2 Recommended Replacement Interval 23
- 6.4.3 Early Replacement Recommendations 23
- 6.4.4 General Notes 23
- 6.4.5 Seal Cartridge Replacement Procedure 24
- 6.5 Storage Recommendations 24

APPENDIX A: SPECIFICATIONS 25

- A.1 Specifications 25
- A.1.1 Performance and Mechanical Specifications 25
- A.1.2 Actuator Sizing 25
- A.1.3 Critical Speed 25
- A.1.4 Roller Screw Life 25

APPENDIX B: TROUBLESHOOTING 26

- B1: Troubleshooting Procedure 26

APPENDIX C: WARRANTY 27

- C.1 Warranty 27
- Limited Warranty 27
- Limitation of Liability 28
- Product Return Procedure 28
- End of Life 28

APPENDIX D: CERTIFICATIONS 29

- D.1 Declaration of Incorporation 29

LIST OF FIGURES & TABLES

Figure 2.1: RSH Actuators (22,25,30 sizes) 9
Figure 2.2: RSH major components 9
Figure 2.3: RSH actuator identification label for actuators made in the U.S.A. 10
Figure 3.1: RSH Ordering 12
Figure 3.2: RSH Standard front face mounting holes 13
Figure 3.3: RSH Mounting Options 13
Table 4.1: RSH Weights 15
Figure 4.1: Proper (and improper) RSH Lifting Technique 15
Figure 4.2: ***1. & 2.*** Recommended RSH thrust rod orientation is down or horizontal. ***3.*** Due to increased risk of contamination and ingress it is not recommended to orient the RSH actuator with the thrust rod up. 16
Table 4.2: RSH motor pulley shaft coupling torque recommendations 17
Table 4.3: RSH Front Face mounting torque recommendations 17
Table 4.4: RSH Part Installation ERD mounting torque recommendations 18
Table 4.5: RSH Actuator Mounting ERD mounting torque recommendations 18
Table 4.6: RSH Part Installation FFG mounting torque recommendations 18
Table 4.7: RSH Front Flange mounting torque recommendations 18
Table 4.8: FM2 (Foot Mount) part installation torque recommendations. 19
Table 4.9: FM2 (Foot Mount) actuator installation torque recommendations. 19
Figure 4.3: For RSH hold the thrust rod stationary using a wrench on the flats at the end of the thrust rod when attaching accessories, linkages or load to the actuator. 20
Table 4.10: IET and MET (External threaded rod end) part installation torque recommendations. 20
Table 6.1: Grease relubrication quantity for RSH actuators 22
Figure 6.1: Seal cartridge exploded view 24
Table 6.2: Seal cartridge replacement torque recommendations 24

1: SAFETY

1.1 Safety Symbols

General

Read completely through the applicable sections of the manual before the equipment/unit is unpacked, installed or operated. Pay careful attention to all of the dangers, warnings, cautions and notes stated in the manual. Serious injury to persons or damage to the equipment may result if the information in the manual is not followed.

Safety Symbols

Items that are specifically marked DANGER, WARNING, CAUTION, PROHIBITIVE, MANDATORY ACTION, or NOTE! are arranged in a hierarchical system and have the following meaning:

DANGER!

Indicates a very hazardous situation which, if not avoided, could result in death or serious injury. This signal word is limited to the most extreme situations.

WARNING!

Indicates a potentially hazardous situation which, if not avoided, could result in death or serious injury.

CAUTION!

Indicates a potentially hazardous situation which, if not avoided, may result in property damage, minor or moderate injury.

PROHIBITED ACTION

Indicates Prohibited Action

MANDATORY ACTION

Indicates Mandatory Action

NOTE!

Information that requires special attention is stated here.

1.2 Safety Considerations

Proper and Safe Use of Product

Fail Safe e-Stop Recommendations

When motor is attached, a means for a failsafe e-stop is highly recommended to ensure equipment and personal safety. The e-stop should provide a means to remove main power from the actuator to cease and prevent any unwanted motion.

Device Damage Prevention

If so equipped, to prevent permanent damage to the device, proper care should be taken not to exceed published voltage, current, temperature, and load/force ratings. In addition, proper mechanical assembly and proper wiring should be verified and safety measures checked before applying power to the complete equipment package.

Personal Safety
During normal operation the motor can become hot, especially the motor housing. In addition, the case ground should be tied to an earth ground to prevent the presence of case voltage.
During normal operation, the actuator rod travels in and out creating a possible pinch point.
Proper guarding and signage must be used to prevent entry into possible pinch zones and contact with hot surfaces. It is highly recommended to display proper safety notices and implement proper safety measures to prevent contact with hot surfaces.

Handling and Unpacking
When unpacking and handling the actuator, care should be taken not to drop the actuator as this can damage the connectors and internal electronics or cause misalignment of the actuator feedback device. Damage the internal mechanical components may cause poor performance or render the actuator non-functional. Since this is an electromechanical device, proper ESD measures should be taken to avoid static electricity from contacting the signal and power lines of the device, as this can damage the internal mechanical components rendering the actuator damaged or non-functional.

Packing and Transport
NOTE!
Package actuator to prevent damage during transport. It is recommended that the actuator be returned in its original packaging. If the original packaging is not available, follow these recommendations.

1. Foam in place if possible.
2. Reinforce ends of box with multiple layers of cardboard or wood to prevent the actuator from breaking through the packaging during shipment.
3. If so equipped, support the connectors or cables so that enough packaging or foam is in place to prevent shipping damage.
4. It is best to ship one unit per container because individual items that are not isolated with stable packaging (foam in place) from each other often get damaged during shipment.
5. When shipping more than one unit in a single container, it is recommended to foam in place to prevent damage during shipping to both the units and the packaging.
6. Add the RMA number on the outside of the packaging. Failure to do so will delay processing.

Modifications to the Equipment
WARNING WARNING!
The manufacturer takes no responsibility whatsoever if the equipment is modified or if the equipment is used in any way beyond performance specifications. Unauthorized modifications or changes to the equipment are strictly forbidden and void all warranties.

Requirement Regarding Personnel

NOTE!
All personnel must be completely informed regarding all safety regulations and the function of the equipment.

Risk Area and Personnel
When installed, pinch points are generated capable of damaging forces. The risk area surrounding the actuator must either be guarded or clearly marked, including display signage in accordance with all applicable national

and international legal requirements. The risk area must be protected by a safety system that stops the equipment if anyone enters the risk area. Personnel who enter the risk area must be authorized, trained and qualified for the different tasks inside the risk area.

1.3 General Information

This documentation applies to the RSH family of products supplied by Tolomatic. This documentation shall be made available to the market and end customers.
This document contains information on safe use parameters, installation, operation, maintenance, and end of life.

2: RSH Product Overview

2.1 General Description

Figure 2.1: RSH Actuators (22,25,30 sizes)

The RSH family of screw driven mechanical linear actuators, manufactured and sold by Tolomatic Inc., are intended for general purpose industrial use. This product family includes the following models available in a standard metric interface: RSH22, RSH25 and RSH30. Tolomatic's RSH electric rod style actuators are mechanical assemblies that provide linear travel up to 48 inches/1219.2mm, with load capacities up to 7,950lbf/35.4kN. An appropriately marked electric motor is coupled to this mechanical device to create linear motion. The electric motor may be installed by the customer at their facility, or by Tolomatic.

2.2 Product Features

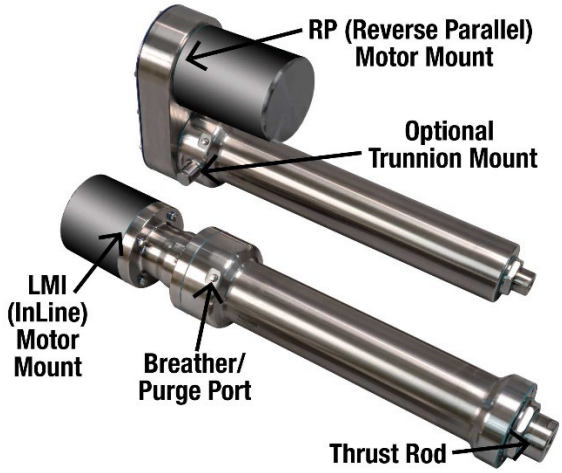

Figure 2.2: RSH major components

2.3 Intended Use

Commonly used in industrial automation and other applications, these actuators are relatively compact and are capable of high force.

WARNING WARNING!

Before installation and commissioning of the equipment, this manual and all accompanying manufacturer

documents and manuals MUST be completely read by the appropriate personnel. All warning texts must be given special attention.

⚠WARNING WARNING!
RSH linear actuators are equipped with ball screws and roller screws that are not self-braking and will not hold position under load. When there is no current/torque input to the drive motor, the thrust rod can move freely. A motor brake option should be purchased and installed if the motion system/axis requires the actuator to hold position when the actuator is not powered.

2.3 Storage

Pay attention to the following when storing the actuator:

- Perform repairs, maintenance and inspections before storing equipment to ensure that the equipment is in good working order.
- Make sure the equipment is placed in a suitable storage position (horizontal) to prevent damage to the connectors and electronics.
- Protect the feedback device, which is located at the blind (non-rod end) of servo motors (if used).
- Store in clean and dry environment.
- After six (6) months of storage it is recommended to cycle two complete strokes of the actuator to redistribute the internal lubricants.

It is also recommended to cycle the actuator two complete strokes before placing in service.

- If stored for a period longer than 2 years without use it may be necessary to replace the lubricants. Return to Tolomatic for this maintenance.
- Storage temperature is -25°C to +60°C (-13°F to +140°F).

2.4 Identification Label

Figure 2.3: RSH actuator identification label for actuators made in the U.S.A.

2.5 Certification

The RSH product family comes standard with an IP69k static ingress protection rating.

2.6 Manufacturer

USA - Headquarters
Tolomatic Inc.
3800 County Road 116
Hamel, MN 55340, USA
Phone: (763) 478-8000
Toll-Free: **1-800-328-2174**
sales@tolomatic.com
www.tolomatic.com

MEXICO
Centro de Servicio
Parque Tecnológico Innovación
Int. 23, Lateral Estatal 431,
Santiago de Querétaro,
El Marqués, México, C.P. 76246
Phone: +1 (763) 478-8000
help@tolomatic.com

EUROPE
Tolomatic Europe GmbH
Elisabethenstr. 20
65428 Rüsselsheim
Germany
Phone: +49 6142 17604-0
help@tolomatic.eu

CHINA
Tolomatic Automation Products (Suzhou) Co. Ltd.
No. 60 Chuangye Street, Building 2
Huqiu District, SND Suzhou
Jiangsu 215011 - P.R. China
Phone: +86 (512) 6750-8506
ServoWeldChina@tolomatic.com

3: RSH Actuator Product Configuration

3.1 RSH Configuration Overview:

3.1.1 RSH Series Configuration

3 Frame Sizes: RSH22, RSH25, RSH30
Screw and Nut options: Ball Screws and Roller Screws
Actuator Mount Options: Front Face Tapped Holes (Standard), Flange Mount (FFG), Trunnion Mount (TRR/TRM), Foot Mounts (FM2), Drop in Replacement ERD Front Face Mount (ERD)

NOTE!

For performance data and specifications please refer to the Tolomatic RSH catalog #2100-4010.

3.2 Standard Configurations and Options

NOTE!

Please see the Tolomatic RSH catalog #2100-4010 for complete information on ordering codes. Use 3D CAD files (available at www.tolomatic.com) for critical dimensions.

RSH – Hygienic Electric Rod-Style Actuator

ORDERING

RSH 25 RN05 SM152.4 LMI PSL

MODEL	
RSH	Rod-Style Actuator

SIZE
22, 25, 30

NUT/SCREW COMBINATIONS		
SIZE	CODE	revs/in or lead
22	BNM	05, 10, 20 mm lead
	RN	05, 10 mm lead
25	BN	04 rev/in
	BNM	05, 10, 25 mm lead
	RN	05, 10 mm lead
30	BN	04 rev/in
	BNM	05, 10, 20mm lead
	RN	05, 10 mm lead

STROKE LENGTH	
SM___	Enter desired stroke length in millimeters (25.4mm = 1 inch)

MAXIMUM STROKE				
	SN or BN		Roller Nut	
SIZE	mm	in	mm	in
22	1000.0	39.4	609.6	24
25	1000.0	39.4	914.4	36
30	1219.2	48	914.4	36

Contact Tolomatic with requests for longer strokes

MOTOR MOUNTING	
LMI	In-line motor mount
RP1*	1:1 ratio, Reverse Parallel motor mount
RP2*	2:1 ratio, Reverse Parallel motor mount

SEALING OPTIONS	
PSL	Polyurethane/Polyurethane Rod Seals (Standard)
USL	Polyurethane/UHMWPE Rod Seals (Severe Chemicals)

ACTUATOR GUIDE & ANTI-ROTATE	
ARI	Internal Anti-Rotate

ARI not available for RSH30 RN05, RSH30 RN10

ROD END OPTION	
IET	Imperial External (Male) Thread Adapter
MET	Metric External (Male) Thread Adapter

ACTUATOR MOUNTING	
FFG**	Front Flange Mount
TRM	Trunnion Mounting, Rear (metric)
TRR	Trunnion Mounting, Rear (US standard)
FM2**	Foot Mount
ERD	RSH to ERD Face Mount Adapter

**NOTE: Foot Mount and Front Flange Mount are shipped together with the actuator but are not installed by Tolomatic.

OPTION ORDERING

ARI FFG KK2 YM___

SWITCHES**							
TYPE	LOGIC	NORMALLY	QUICK-DISCONNECT	CODE	QUANTITY	LEAD LENGTH	
REED	SPST	Open	No	RY	After code enter quantity desired	5 m (16.4 feet)	6 in (152mm) to QD connector w/ 5m lead
			Yes	RK			
SOLID STATE	PNP	Open	No	TY			
			Yes	TK			
	NPN	Open	No	KY			
			Yes	KK			

**NOTE: Switches are shipped together with the actuator but are not installed by Tolomatic.

YOUR MOTOR HERE	
YM____	Motor mount for non-Tolomatic motor. www.tolomatic.com

Available FREE at www.tolomatic.com

Not all codes listed are compatible with all options. Contact Tolomatic with any questions.

Figure 3.1: RSH Ordering

3.3 RSH Mounting Features and Options

3.3.1 Standard RSH Actuator Mounting

Standard mounting for the RSH is through the largest four (4) tapped holes on the front face of the actuator.

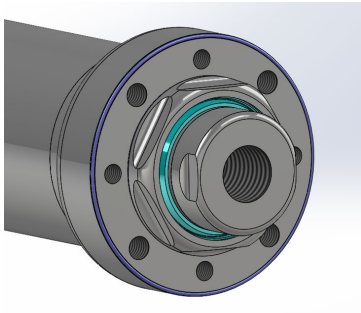

Figure 3.2: RSH Standard front face mounting holes

3.3.2 RSH Actuator Mounting Options

All mounting options are valid for all LMI (inline) and RP (Reverse Parallel) motor mounting options.
RSH actuator mounting options include: Front Flange Mount [FFG], Trunnion Mount [TRR/TRM], Foot Mount [FM2], Drop in Replacement ERD Front Face Mount [ERD].

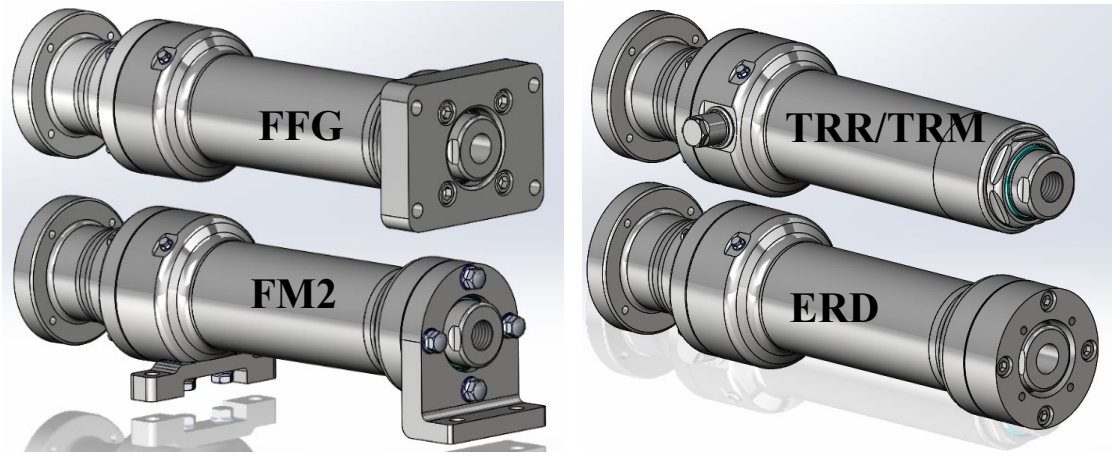

Figure 3.3: RSH Mounting Options

3.3.3 RSH Actuator Rod End Options

The standard rod end for the RSH is a female thread. The RSH product family has an option for male rod ends for imperial (IET) and metric (MET) threads.

3.4 Screw Options

Ball and roller screw technologies are offered as drive options. Contact Tolomatic for application review and assistance in selecting a screw technology option.

3.5 Anti-Rotate Option

In order to achieve linear motion with the RSH a form of external anti rotations must be attached to the rod end. If the machine/application design doesn't allow for this, an internal anti-rotate option (ARI) is available for all RSH product sizes.

4: Mechanical Installation of RSH Actuators

WARNING!
Before installation and commissioning the equipment, this manual and all accompanying manufacturer documents and manuals MUST be completely read by the appropriate personnel. All warning texts must be given special attention.

4.1 General Operation

RSH series linear actuators function by translating the rotary motion of externally mounted electric motor into linear motion of the thrust rod using a screw driven mechanism. The travel coordinates, linear speed, acceleration and force are typically controlled by a servo drive.
The relationship between the rotary motion of the motor and the linear motion of the actuator corresponds to the following relationships:

Linear distance traveled = (screw revolutions) * (screw lead)
Linear Speed = ([screw RPM]/60) * (screw lead)
Linear Thrust for inline or 1:1 RP(kN) = Motor torque (Nm) * 2 * π * pitch (rev/mm) * screw efficiency
or
Linear Thrust for inline or 1:1 RP (lbf) = Motor torque (in•lb) * 2 * π * pitch (rev/in) * screw efficiency
Linear Thrust for a 2:1 RP(kN) = Motor torque (Nm) * 4 * π * pitch (rev/mm) * screw efficiency
or
Linear Thrust for a 2:1 RP (lbf) = Motor torque (in•lb) * 4 * π * pitch (rev/in) * screw efficiency

CAUTION!
Care should be taken not to exceed the physical travel limits of the actuator. Exceeding the specified stroke will cause the actuator to reach mechanical end of stroke internally. Although protected by the end of stroke bumpers, reaching internal end of stroke at speeds and torque greater than those used to home (less than 1in/sec or 25mm/sec) and low torque (actuator dependent consult factory) will physically damage the screw and the internal components of the actuator.

4.2 Alignment and Side Loading:

Alignment of the actuator with respect to the application load and axis of motion is essential to minimize side loading. The actuator is not meant to be used in applications where side loading occurs as side loading will reduce the life of the actuator and seals.

4.3 Mechanical Installation Instructions

1. Remove packaging
2. Carefully remove linear actuator from package. *Consider the weight of the actuator.
3. Visually inspect the actuator for damage. Damage to the thrust tube could prevent proper ingress protection.
4. Notify the carrier of any shipping damage immediately
5. If the actuator is mounted in a vertical or inclined (sloping) position, include safety measures that control the work load in case of a screw failure.
6. It is recommended to install the actuator with rod-end down or at a downward inclination to achieve best seal ingress protection.
7. Ensure sufficient clearance around the actuator to allow for airflow and cooling.
8. Mount RSH using standard front or optional mounting as needed for your individual application.

4.4 Lifting and Moving

⚠ CAUTION CAUTION!

Special care must be taken when lifting this device. Depending on the size and configuration RSH actuators can represent heavy and awkward loads. Lifting equipment with appropriate capacity should be used, and safe hoisting practices must be employed. Note the weights in the table below.

RSH SIZE	Screw Code	Mass		
		LMI	RP	
		Base	Base	Per Inch
		lb	lb	lb
22	BNM05	11.6	18.9	0.45
	BNM10	11.5	18.9	0.45
	BNM20	11.6	18.9	0.45
	RNM04	12.5	19.9	0.38
	RNM05	12.5	19.9	0.38
	RNM10	12.5	19.9	0.38
25	BN04	34.8	40.2	0.84
	BNM05	34.3	39.7	0.82
	BNM10	34.7	40.1	0.82
	BNM25	34.5	39.9	0.83
	RNM04	36.8	42.2	0.79
	RNM05	36.8	42.2	0.79
	RNM10	36.8	42.2	0.79
30	BN04	41.2	46.6	1.30
	BNM05	42.3	47.7	1.32
	BNM10	43.7	49.1	1.32
	BNM20	41.8	47.2	1.32
	RNM05	43.5	48.9	1.16
	RNM10	43.5	48.9	1.16

RSH SIZE	Screw Code	Mass		
		LMI	RP	
		Base	Base	Per Inch
		kg	kg	kg
22	BNM05	5.3	8.6	0.01
	BNM10	5.2	8.6	0.01
	BNM20	5.3	8.6	0.01
	RNM04	5.7	9.0	0.01
	RNM05	5.7	9.0	0.01
	RNM10	5.7	9.0	0.01
25	BN04	15.8	18.2	0.02
	BNM05	15.6	18.0	0.01
	BNM10	15.7	18.2	0.01
	BNM25	15.6	18.1	0.01
	RNM04	16.7	19.1	0.01
	RNM05	16.7	19.1	0.01
	RNM10	16.7	19.1	0.01
30	BN04	18.7	21.1	0.02
	BNM05	19.2	21.6	0.02
	BNM10	19.8	22.3	0.02
	BNM20	19.0	21.4	0.02
	RNM05	19.7	22.2	0.02
	RNM10	19.7	22.2	0.02

Table 4.1: RSH Weights

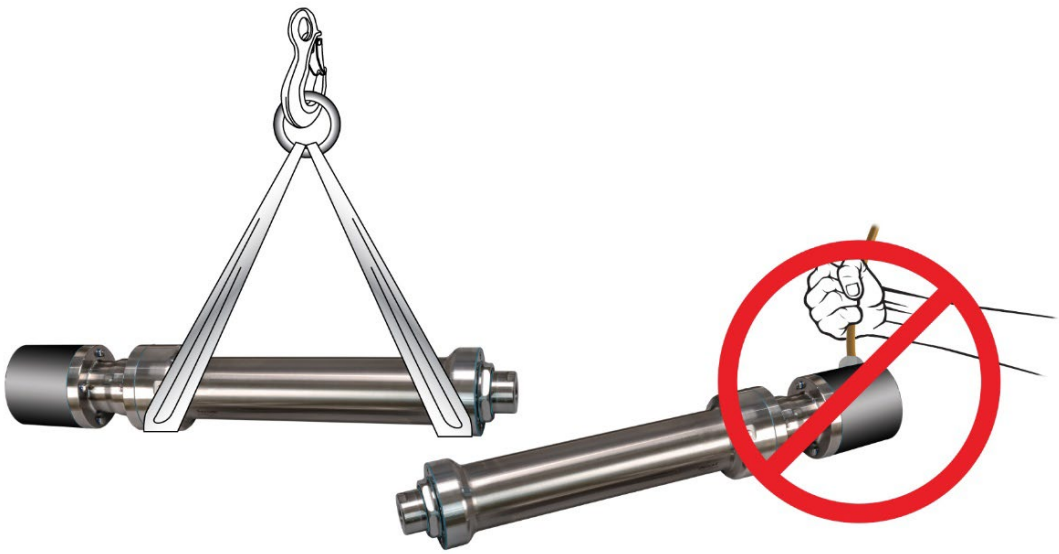

Figure 4.1: Proper (and improper) RSH Lifting Technique

4.5 Actuator Orientation

1. Rod End Down (Best) 2. Rod End Horizontal (Good) 3. Rod End Up (Not Recommended)

It is not recommended to mount the RSH with the thrust rod pointing upwards. Mounting the thrust rod vertically increases the risk of contamination and ingress.

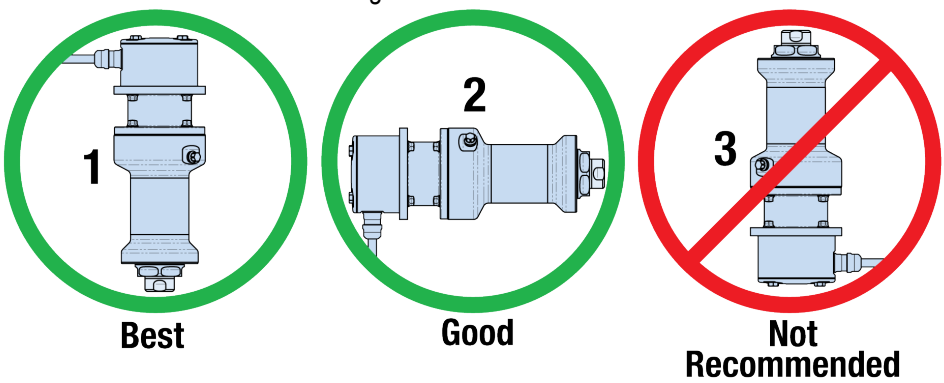

*Figure 4.2: **1. & 2.** Recommended RSH thrust rod orientation is down or horizontal. **3.** Due to increased risk of contamination and ingress it is not recommended to orient the RSH actuator with the thrust rod up.*

4.6 Motor Installation

4.6.1 RSH Inline Motor Mounting

The RSH inline motor mount utilizes a standard spider coupler assembly. It is critical to ensure that the coupler half mounted to the shaft of the motor is installed with enough clamp force to transmit the torque required. Insufficient torque can result in “slipping” between the motor shaft and the coupler half. It is also important to mount the coupler half in the correct position of the shaft so that it correctly engages the spider. To achieve an IP69K system rating, the mounting of the motor needs to be executed correctly. The motor manufacturer should be consulted to correctly seal the front face of the motor.

4.6.2 RSH Reverse Parallel Motor Mounting Procedure

1. Install the motor to the face of the RP plate following the motor manufactures best practices for face sealing. Tighten stainless steel fasteners using torque recommendations for A4-70 grade fasteners.
2. Install belt on the actuator pulley
3. Slide motor pulley onto the shaft of the motor while simultaneously sliding belt on the motor pulley. Install motor pulley per procedure
4. Tension the belt using eccentric belt tensioning assembly. Turn eccentric assembly 90° so that the flats of the assembly are perpendicular to the side wall of the RP Plate. Torque belt tensioner fastener to 70 in-lbs to set location.
5. Validate the belt tension using a sonic tension meter.
    a. Sonic Tension Meter
        i. Enter the mass, width and span from the table above into the tension meter
        ii. Test the belt using the manufactures recommendation
6. Install RP Plate gasket into the seal groove of the RP plate.
7. Install RP cover by torquing fasteners to 40 in-lbs. A torque pattern should be followed to evenly compress the RP gasket.

⚠ CAUTION **CAUTION!**

Actuator shouldn’t be operated without the RP cover installed.

4.6.3 Motor Pulley Installation

1. Insert locking assembly into the bore of the motor pulley. Verify that the flange of the locking assembly is flush with the bottom surface of the counterbore in the pulley.
2. Hand tighten all locking screws until they make contact with the face of the locking assembly flange
3. Using a calibrated torque wrench, start with the fastener adjacent to the slit and move clockwise making a quarter turn until the torque in the table below is achieved for each locking screw.

Locking Assembly Installation Torque

Actuator Size	Reduction	Motor Shaft Diameter (mm)	Coupling Style	Installation Torque (Nm)
RSH22	RP1 / RP2	9	Keyless Locking Assembly	4
	RP1 / RP2	11	Keyless Locking Assembly	3
	RP1 / RP2	14	Keyless Locking Assembly	3
	RP1 / RP2	16	Keyless Locking Assembly	3
	RP1 / RP2	19	Keyless Locking Assembly	3
RSH25 / RSH30	RP1	14	Keyless Locking Assembly	5
	RP1	16	Keyless Locking Assembly	5
	RP1	19	Keyless Locking Assembly	5
	RP1	24	Trantorque	75
	RP1	28	Keyless Locking Assembly	6
	RP1	32	Keyless Locking Assembly	6
	RP2	14	Keyless Locking Assembly	5
	RP2	16	Keyless Locking Assembly	5
	RP2	19	Keyless Locking Assembly	5
	RP2	24	Trantorque	75

Table 4.2: RSH motor pulley shaft coupling torque recommendations

4.7 Standard RSH Actuator Mounting

Mechanical Installation Bolt and Torque Table.

Front Face Mounting:

RSH Model		Front Face Tapped Holes	Minimum Fastener Grade	Torque in-lbf	Torque N-m
RSH 22	Primary	M8 X 1.25	A4-70	150	16.9
RSH 22	Secondary	M6 X 1.00	A4-80	75	8.5
RSH 25	Primary	M10 X 1.50	A4-70	300	33.9
RSH 25	Secondary	M8 X 1.25	A4-80	200	22.6
RSH 30	Primary	M12 X 1.75	A4-70	600	67.8
RSH 30	Secondary	M10 X 1.50	A4-80	450	50.8

Table 4.3: RSH Front Face mounting torque recommendations

4.8 Options

4.8.1 FFG, ERD (Front Flange and Drop in Replacement ERD Mount)

FFG and ERD parts are secured to the actuator at the factory. If the components need to be removed and reinstalled, torque recommendations can be found in the "Part Installation Torque Recommendations" table below. Torque values are based on the use of 316 stainless steel components. The seals and gaskets for both options are for one-time use only. If the components are removed, new static seals are required before re-installation. Please see Tolomatic RSH catalog #2100-4010 for dimensional drawings. Use 3D CAD files (available at www.tolomatic.com) for critical dimensions.

Part Installation Torque Recommendations (ERD)

RSH Model	Fastener	Minimum Fastener Grade	Torque in-lbf	Torque N-m
RSH 22	M6 X 1.00	A4-80	75	8.5
RSH 25	M8 X 1.25	A4-80	200	22.6
RSH 30	M10 X 1.50	A4-80	450	50.8

Table 4.4: RSH Part Installation ERD mounting torque recommendations

Actuator Mounting Torque Recommendations (ERD)

RSH Model	Front Face Tapped Holes	Minimum Fastener Grade	Torque in-lbf	Torque N-m
RSH 22	M6 X 1.00	A4-70	75	8.5
RSH 25	M8 X 1.25	A4-70	200	22.6
RSH 30	M8 X 1.25	A4-70	175	19.8

Table 4.5: RSH Actuator Mounting ERD mounting torque recommendations

Part Installation Torque Recommendations (FFG)

RSH Model	Fastener	Minimum Fastener Grade	Torque in-lbf	Torque N-m
RSH 22	M8 X 1.25	A4-70	150	16.9
RSH 25	M10 X 1.50	A4-70	300	33.9
RSH 30	M12 X 1.75	A4-70	600	67.8

Table 4.6: RSH Part Installation FFG mounting torque recommendations

Actuator Mounting Torque Recommendations (FFG)

RSH Model	Fastener	Minimum Fastener Grade	Torque in-lbf	Torque N-m
RSH 22	M8 X 1.25	A4-70	150	16.9
RSH 25	M10 X 1.50	A4-70	300	33.9
RSH 30	M12 X 1.75	A4-70	600	67.8

Table 4.7: RSH Front Flange mounting torque recommendations

4.8.2 FM2 (Foot Mount)

RSH series actuators may be mounted to a surface parallel to the line of motion using mounting plates located under the bearing block and the front face of the front head of the actuator (Option FM2). The rear mounting plate is secured with (2) Tolomatic supplied fasteners and the front bracket is secured using (4) Tolomatic supplied fasteners. In the "Part Installation Torque Recommendations" table below are fasteners torque recommendations for installing mounting plates. Parts should be inspected for damage and cleaned before installation. Before mounting plate fasteners are tightened, seals should be inspected to verify they are installed correctly. Please see Tolomatic RSH catalog #2100-4010 for dimensional drawings. Use 3D CAD files (available at www.tolomatic.com) for critical dimensions.

Part Installation Torque Recommendations (FM2)

RSH Model		Tapped Holes	Minimum Fastener Grade	Torque in-lbf	Torque N-m
RSH 22	Rear	M6 X 1.0	A4-70	70	6.8
RSH 22	Front	M6 X 1.0	A4-70	70	6.8
RSH 25	Rear	M10 x 1.5	A4-70	300	33.9
RSH 25	Front	M8 X 1.25	A4-70	150	16.9
RSH 30	Rear	M10 x 1.5	A4-70	300	33.9
RSH 30	Front	M10 x 1.5	A4-70	300	33.9

Table 4.8: FM2 (Foot Mount) part installation torque recommendations.

Actuator Installation Torque Recommendations (FM2)

RSH Model		Front Face Tapped Holes	Minimum Fastener Grade	Torque in-lbf	Torque N-m
RSH 22	Rear	M6 X 1.0	A4-70	70	6.8
RSH 22	Front	M6 X 1.0	A4-70	70	6.8
RSH 25	Rear	M10 x 1.5	A4-70	300	33.9
RSH 25	Front	M10 x 1.5	A4-70	300	33.9
RSH 30	Rear	M10 x 1.5	A4-70	300	33.9
RSH 30	Front	M10 x 1.5	A4-70	300	33.9

Table 4.9: FM2 (Foot Mount) actuator installation torque recommendations.

4.8.3 IET and MET (Rod End: Imperial and Metric External Threaded Option)

As standard, the RSH isn't equipped with an anti-rotate feature to prevent the thrust rod from rotating. The RSH requires an external form of anti-rotation if the actuator isn't configured to include the internal anti-rotate option (ARI). However, when attaching accessories, linkages or load to the thrust rod end it is critical to protect the internal components. Use a wrench on the flats at the end of the thrust rod to prevent rotation. Use a torque wrench to tighten the interfacing rod end to the actuator threaded connection point. Torque values provided in the following table.

Figure 4.3: For RSH hold the thrust rod stationary using a wrench on the flats at the end of the thrust rod when attaching accessories, linkages or load to the actuator.

Please see Tolomatic RSH catalog #2100-4010 for dimensional drawings. Use 3D CAD files (available at www.tolomatic.com) for critical dimensions.

IET and MET Part Installation Torque Recommendations:

RSH Model	Rod End Option	Torque ft-lbf	Torque N-m
RSH 22	IET / MET	15	20.3
RSH 25	IET / MET	75	101.7
RSH 30	IET / MET	150	203.4

Table 4.10: IET and MET (External threaded rod end) part installation torque recommendations.

5: RSH Operation and Start up Considerations

5.1 Back Driving

WARNING WARNING!

RSH actuators are equipped with screws that are not self-braking and will not hold position under load. When there is no current/torque input to the drive motor, the screw will rotate and the thrust rod can move freely. A motor brake option should be used if the motion system/axis requires the actuator to hold position when it is not powered, or as a safety measure if the actuator is mounted in a vertical orientation to prevent the payload from free falling in the event of unintended power loss.

NOTE!

Motor brakes are not recommended for RP (Reverse Parallel) motor mounts.

5.2 Homing

To establish full open and close position of the actuator, set the drive torque limits to the lowest values possible for motion (10-20% to begin with) and use a slow velocity jog command (<1mm/s) to search for the hard limits. If 10-20% of the continuous current is not sufficient to drive both the actuator installed on the equipment, slowly increase the current limit until the unit is able to move to both the fully open and fully closed positions. Proper care must be taken when finding hard limits after installation to the equipment. Applying a load in excess of the continuous rated force at the end of travel may cause internal damage and could render the assembly inoperable.

Once the full open and closed positions are determined, these values can be stored in the drive/controller as travel limits.

5.3 Breather Port

Breather Port is a standard feature on RSH 22, 25 and 30 size actuators. Located on the outside diameter of the main bearing plate, the breather port allows air flow into the interior of the actuator. Prevents additional load on the motor caused by air buildup due to fast cycling of the RSH.

6: RSH MAINTENANCE

WARNING!
All power and supply media must be shut OFF before any work is performed on any equipment that is associated with the actuator. It is recommended that actuator repairs be performed at Tolomatic or by a Tolomatic service center.

NOTE!
Besides rod seal cartridges, replacement parts for RSH actuators are not available for sale and RSH must be returned to Tolomatic or a Tolomatic service center for repairs.

Contact Tolomatic for RMA (Return Merchandise Authorization) instructions.

6.1 Maintenance Check and Intervals

RSH actuators should be visually inspected on a regular basis, at least once per quarter. Visually inspect the thrust rod, seals, belts and pulleys, if equipped, and any mounting features for wear.

6.2 Lubrication procedure and interval.

6.2.1 RSH Lubrication

RSH ball screw actuators are lubricated at the factory and are typically considered lubricated for the life of the actuator. High duty cycle applications may require lubrication of the ball screw. In such cases the “Roller Screw Lubrication” recommendation for frequency should be followed.

6.2.2 Roller Screw Lubrication

RSH actuators include a rod end grease zerk to allow the end user the option of re-greasing the roller screw and roller nut. Roller Screw Lubrication requirements depend on the motion cycle (velocity, force and frequency of operation), type of application, ambient temperature, environmental and other factors.
In general purpose applications to maximize service life Tolomatic recommends to re-lubricate the actuator at least every 1,000,000 cycles or once every year whichever comes first. For more demanding applications such as pressing, high frequency motion or other cases where the roller screw is highly stressed, the re-lubrication interval will need to be more frequent. In such applications it is recommended to execute at least five full length stroke moves every 5,000 cycles of operation to redistribute the lubricant within the actuator.

Re-lubricate with Mobile Polyrex 462 into the grease zerk located on the rod end:

	RSH22	RSH25	RSH30
Qty.	2.5 g + (0.010 x § mm)	4.8 g + (0.010 x § mm)	5.3 g + (0.018 x § mm)
Qty.	0.09 oz + (0.009 x § in)	0.17 oz + (0.009 x § in)	0.19 oz + (0.016 x § in)
§ = Stroke length (mm or in)			

Table 6.1: Grease relubrication quantity for RSH actuators

6.3 Wash-down Recommendations

- Cleaning should only be completed by qualified personnel.
- Tolomatic requires the actuator to be stationary and power removed from the motor during cleaning.
- It is recommended that the actuator be fully retracted during cleaning.
- Follow IP69k wash-down standards for pressure, proximity and temperature. Violating the IP69k standards could be detrimental to the life of the actuator.
- Tolomatic prohibits the use of friction style cleaning such as a wire brush. Wash-down and wipe down cleaning are the only approved cleaning methods.
- Minimum acceptable concentrations of cleaning chemicals should be used to successfully sanitize the equipment. Consult Tolomatic for chemical compatibility.
- A rinse down of the actuator is required after the cleaning process to minimize seal exposure to sanitizing chemicals.

6.4 Seal Replacement Recommendations

6.4.1 Application Assumptions for Replacement Interval

- One wash-down per day following wash-down guidelines above.
- Actuator is not experiencing side load during operation
- Thrust rod is not being contaminated by food product or other materials during operation.
- Hardware is not damaged and is still in operating condition.
- Maximum velocity and acceleration limits are not exceeded.
- Actuator is operating within a specified temperature range.

6.4.2 Recommended Replacement Interval

- Seals should be replaced every 25 million inches of travel. Customer testing or experience can prolong seal replacement intervals.

6.4.3 Early Replacement Recommendations

- 50% reduction in the standard seal replacement interval if food product is expected to be present on the thrust rod during operation.
- 50% reduction in the standard seal replacement interval if the wash-down frequency is 3+ times per day.
- 50% reduction in the standard seal replacement interval if high sanitizing chemical concentrations are used. Seal exposure time is important to consider, a rinse after sanitizing is recommended to remove residual sanitizing chemicals from the seals and surrounding hardware.

6.4.4 General Notes

- Periodic re-lubrication of rod seals with Mobil SHC Polyrex 462 will increase the life of the seals.
- Periodic visual inspection of the thrust rod and front seals is recommended.

6.4.5 Seal Cartridge Replacement Procedure

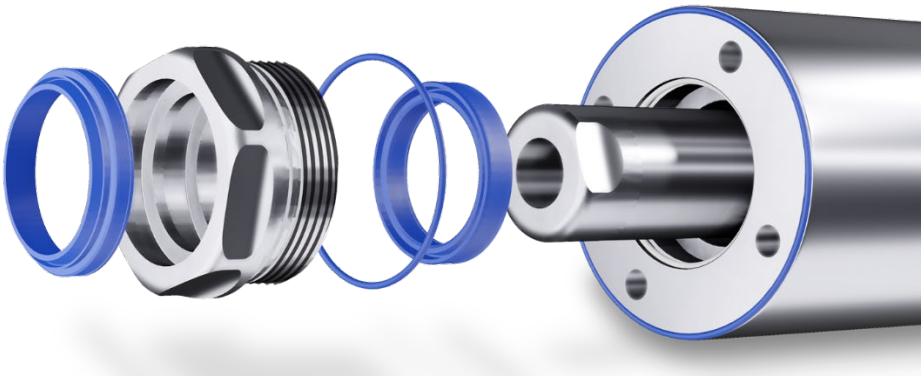

Figure 6.1: Seal cartridge exploded view

- It is recommended to secure the actuator in a vertical rod up orientation.
- Using a wrench or socket, remove the seal cartridge from the actuator.
- Remove NEW seal cartridge from packaging. Verify that grease is present between the rod seals. If no grease is present, the seal should be adequately lubricated with SHC Polyrex 462 before the cartridge is installed.
- Verify both O-rings are correctly installed and lubricated before installing the assembly onto the actuator.
- Install seal cartridge per torque recommendations listed in the table below.
- Verify face sealing O-ring is “flush” to the front surface of the actuator body.

Seal Cartridge Replacement:

RSH Model	Hex Size	Torque	
		in-lbf	N-m
RSH 22	43 mm	360	40
RSH 25	50 mm	450	50
RSH 30	70 mm	600	70

Table 6.2: Seal cartridge replacement torque recommendations

6.5 Storage Recommendations

- Prior to storing the actuator perform repairs, maintenance and inspections to ensure the equipment is in good working order.
- Make sure the equipment is placed in a suitable storage position to prevent damage to the seals or thrust rod.
- Make sure that storage will not damage external surfaces creating pits, scratches or crevices.
- Store in clean and dry environment.
- Prior to placing the actuator to service after storage it will be necessary to execute at least 5 full stroke length moves to redistribute the lubricant within the actuator.
- If stored for a period longer than 2 years without use it will be necessary to replace the lubricant. Please return to Tolomatic for this maintenance.
- Storage temperature range -25°C to +60°C (-13°F to 140°F).

APPENDIX A: SPECIFICATIONS

A.1 Specifications

A.1.1 Performance and Mechanical Specifications

NOTE!

For performance data and specifications please refer to the Tolomatic RSH catalog #2100-4010.

A.1.2 Actuator Sizing

NOTE!

For performance data and specifications please refer to the Tolomatic RSH catalog #2100-4010.

NOTE!

For fast, accurate actuator sizing please use the Tolomatic online sizing application: Sizeit.Tolomatic.com

A.1.3 Critical Speed

NOTE!

For performance data and specifications please refer to the Tolomatic RSH catalog #2100-4010.

A.1.4 Roller Screw Life

NOTE!

For performance data and specifications please refer to the Tolomatic RSH catalog #2100-4010.

APPENDIX B: TROUBLESHOOTING

B1: Troubleshooting Procedure

Symptom	CAUSE	SOLUTION
Actuator cannot move	Force is too large for the capacity of the actuator or too much friction is present	Verify force requirements
	Excessive side load	Verify correct operation
	Misalignment of output rod to application	Verify correct alignment
	Actuator has crashed into hard stop	Disconnect from load and manually move away from hard stop. If problem persists, contact Tolomatic for service.
Actuator housing moves or vibrates when shaft is in motion	Loose mounting	Check actuator mounting
Actuator is overheating	Duty cycle is higher than actuator ratings	Verify duty cycle is within continuous ratings
	Actuator low or out of grease	Re-lubricate

APPENDIX C: WARRANTY

C.1 Warranty

Warranty and Limitation of Liability
Tolomatic's complete terms and conditions can be found here https://www.tolomatic.com/info-center/resource-details/terms-and-conditions

Limited Warranty

Tolomatic warrants that at the time of delivery, Products shall be in good condition, free from defects in material and workmanship and that Products made to order shall conform to applicable drawings or specifications as referenced in the quotation or accepted purchase order ("Product Warranty"). The Product Warranty shall expire one year from date of shipment (the "Warranty Period"). Tolomatic warrants that Buyer shall acquire good title to the Products free from third party rights. These warranties are given only to Buyer and not to any third party.
The Product Warranty excludes any defects or non-conformance resulting (wholly or in part) from: (i) accidental damage, mishandling, incorrect installation, negligence or other circumstances arising after delivery; (ii) the repair or alteration of the Product by any party other than Tolomatic or its authorized representative; (iii) the failure by Buyer to provide a suitable storage, use, or operating environment for the Products; (iv) Buyer's use of the Products for a purpose or in a manner other than that for which they were designed; and (v) other abuse, misuse or neglect of the Products by Buyer or any third party.
The Product Warranty excludes any Products not manufactured by Tolomatic. Insofar as any Products are manufactured by third parties, Tolomatic shall, insofar as it can, pass to the Buyer the benefit of all warranties given by the supplier of such Products.
The Product Warranty shall be limited to defects of which Tolomatic is notified within twenty-one (21) days from the date of shipment to Buyer or, in the event of latent defects, within twenty-
one (21) days of the defect being discovered and provided that such notice is received within the Warranty Period. As sole remedy for the breach of the warranty in paragraph (a) above, provided that (if required by Tolomatic) all non-conforming Products are returned to Tolomatic at Buyer's cost, and provided that Tolomatic confirms the defect or non-conformance, Tolomatic shall at its option
(i) replace or repair the defective or non-conforming items, or correct any defective work or non-conformance, or (ii) refund to Buyer the original purchase price of the defective or non-conforming item and reimburse to Buyer any transportation and insurance charges incurred by Buyer.
Any claim by Buyer against Tolomatic alleging the breach of the Product Warranty must be commenced within twelve (12) months following the date of the alleged breach.
In the event the parties disagree whether or not a breach of the Product Warranty has occurred, Tolomatic may (but shall not be obliged to) undertake any repairs or replacement requested by Buyer pending final settlement of the matter. If it is determined that no such breach has occurred, Buyer shall pay Tolomatic upon demand the reasonable price of the repairs, corrections, or replacements made by Tolomatic including allowances for overheads and a reasonable profit margin.
THE WARRANTIES EXPRESSLY MADE UNDER THESE TERMS ARE EXCLUSIVE AND GIVEN IN LIEU OF ALL OTHER REPRESENTATIONS, WARRANTIES AND COVENANTS THAT MAY BE IMPLIED BY LAW, BY CUSTOM OF TRADE, BY THESE TERMS, BY THE PURCHASE ORDER OR OTHERWISE WITH RESPECT TO THE PRODUCTS. TO THE FULL EXTENT PERMITTED BY LAW, TOLOMATIC DISCLAIMS AND BUYER WAIVES ALL SUCH REPRESENTATIONS, WARRANTIES AND COVENANTS INCLUDING BUT NOT LIMITED TO, ANY IMPLIED WARRANTIES OF MERCHANTABILITY, FITNESS FOR A PARTICULAR PURPOSE OR NON-INFRINGEMENT OF THIRD PARTY INTELLECTUAL PROPERTY RIGHTS. BUYER'S SOLE REMEDY FOR BREACH OF WARRANTY IS STATED IN PARAGRAPH (d) ABOVE.
No Products shall be returned without Tolomatic's prior written consent. Products which Tolomatic consents to have returned shall be shipped by Buyer at Buyer's risk and expense, freight prepaid, to such location as Tolomatic designates.

Limitation of Liability

Tolomatic shall in no event be liable to Buyer or any third party, whether in contract, tort (including negligence), misrepresentation, strict liability or otherwise, for any incidental, punitive, consequential, indirect or special damages, including any loss of profits or savings or anticipated profits or savings, loss of data, loss of opportunity, loss of reputation, loss of goodwill or business or potential business, however caused, even if Tolomatic has been advised of the possibility of such damages in advance.

Under no circumstances shall Tolomatic's liability to Buyer in connection with any purchase order or Products supplied to Buyer exceed an amount equal to the amount paid by Buyer for such Products.

Buyer agrees and understands that it is solely Buyer's responsibility to ensure that Products are suitable for Buyer's requirements and for the environment, facilities or machinery for which they are intended by Buyer or by its end-customer to be fitted or used. Even if Tolomatic is advised of Buyer's intended use, Tolomatic makes no representation or warranty that the Product will be suitable for that purpose. Any technical advice furnished by Tolomatic relating to the intended use of the Products

is given for information only and Tolomatic assumes no obligation or liability for the advice given or the results obtained. Except insofar as specifications or drawings form part of a purchase order and the Product Warranty, to the full extent permitted by law, Tolomatic disclaims and Buyer waives all representations, warranties and covenants that may be implied from the provision by Tolomatic of technical advice or information about Product. All such advice and information are accepted by Buyer at its risk.

Insofar as any liability or warranty of Tolomatic cannot be limited or excluded under applicable law, including any laws that do not permit limitations on liability relating to death or personal injury, the provisions of these terms and conditions shall be construed as being subject to such legal limitations, but only if those legal provisions have effect in relation to Tolomatic's liability notwithstanding the governing law provision in Section 18

Product Return Procedure

1. Before initiating the RMA process and obtaining an RMA number, please contact the Tolomatic Technical Support team to determine if it is possible to correct the issue in the field.

2. If an RMA is needed your Tolomatic Technical support team will initiate the RMA process and set up an RMA number. If possible, please contact your local distributor from which the actuator was originally purchased to begin the RMA process.

USA - Headquarters
Tolomatic Inc.
3800 County Road 116
Hamel, MN 55340, USA
Phone: (763) 478-8000
Toll-Free: **1-800-328-2174**
sales@tolomatic.com
www.tolomatic.com

MEXICO
Centro de Servicio
Parque Tecnológico Innovación
Int. 23, Lateral Estatal 431,
Santiago de Querétaro,
El Marqués, México, C.P. 76246
Phone: +1 (763) 478-8000
help@tolomatic.com

EUROPE
Tolomatic Europe GmbH
Elisabethenstr. 20
65428 Rüsselsheim
Germany
Phone: +49 6142 17604-0
help@tolomatic.eu

CHINA
Tolomatic Automation Products (Suzhou) Co. Ltd.
No. 60 Chuangye Street, Building 2
Huqiu District, SND Suzhou
Jiangsu 215011 - P.R. China
Phone: +86 (512) 6750-8506
ServoWeldChina@tolomatic.com

End of Life

Your RSH actuator has been designed to provide years of reliable and trouble-free service, but at some point in time it may be necessary to retire the unit from service. To protect our environment specific guidelines and requirements should be followed. The RSH actuator is primarily constructed from steel and aluminum and contains no hazardous materials.

APPENDIX D: CERTIFICATIONS

D.1 Declaration of Incorporation

Tolomatic
EXCELLENCE IN MOTION

EU Declaration of Incorporation

No: 36004719_00

We the manufacturer,

Tolomatic
3800 County Road 116
Hamel, MN 55340
USA

Declare under our sole responsibility that the product(s),

RSH Actuators

All Models

Fulfills the essential requirements of partly completed machinery in the following directives:

EC Machinery Directive 2006/42/EC

The partly completed machinery must not be put into service until the final machinery into which it is to be incorporated has been declared in conformity with the provisions of the Machinery Directive.

RoHS Directive (2011/65/EU, as amended by (EU) 2015/863)

REACH (Regulation (EC) No 1907/2006)

Assumption of conformity is based on the application of the harmonized or applicable technical standards and, when applicable or required, a European community notified body certification.

Brad Schulz
Director of Engineering & Technology

01.13.2022
Date (dd.mm.yyyy)

2100-4012_00 RSH Manual
Copyright © 2022 Tolomatic, Inc. All rights Reserved.

MADE IN U.S.A.

Tolomatic™
EXCELLENCE *IN MOTION*

COMPANY WITH
QUALITY SYSTEM
CERTIFIED BY DNV
= ISO 9001 =
Certified site: Hamel, MN

USA - Headquarters
Tolomatic Inc.
3800 County Road 116
Hamel, MN 55340, USA
Phone: (763) 478-8000
Toll-Free: **1-800-328-2174**
sales@tolomatic.com
www.tolomatic.com

MEXICO
Centro de Servicio
Parque Tecnológico Innovación
Int. 23, Lateral Estatal 431,
Santiago de Querétaro,
El Marqués, México, C.P. 76246
Phone: +1 (763) 478-8000
help@tolomatic.com

EUROPE
Tolomatic Europe GmbH
Elisabethenstr. 20
65428 Rüsselsheim
Germany
Phone: +49 6142 17604-0
help@tolomatic.eu
www.tolomatic.com/de-de

CHINA
Tolomatic Automation Products (Suzhou) Co. Ltd.
No. 60 Chuangye Street, Building 2
Huqiu District, SND Suzhou
Jiangsu 215011 - P.R. China
Phone: +86 (512) 6750-8506
TolomaticChina@tolomatic.com

All brand and product names are trademarks or registered trademarks of their respective owners. Information in this document is believed accurate at time of printing. However, Tolomatic assumes no responsibility for its use or for any errors that may appear in this document. Tolomatic reserves the right to change the design or operation of the equipment described herein and any associated motion products without notice. Information in this document is subject to change without notice.

Visit www.tolomatic.com for the most up-to-date technical information