Tolomatic™
EXCELLENCE *IN MOTION*

PRODUCT CATALOG

POWER TRANSMISSION

GEARBOXES
CALIPER DISC BRAKES



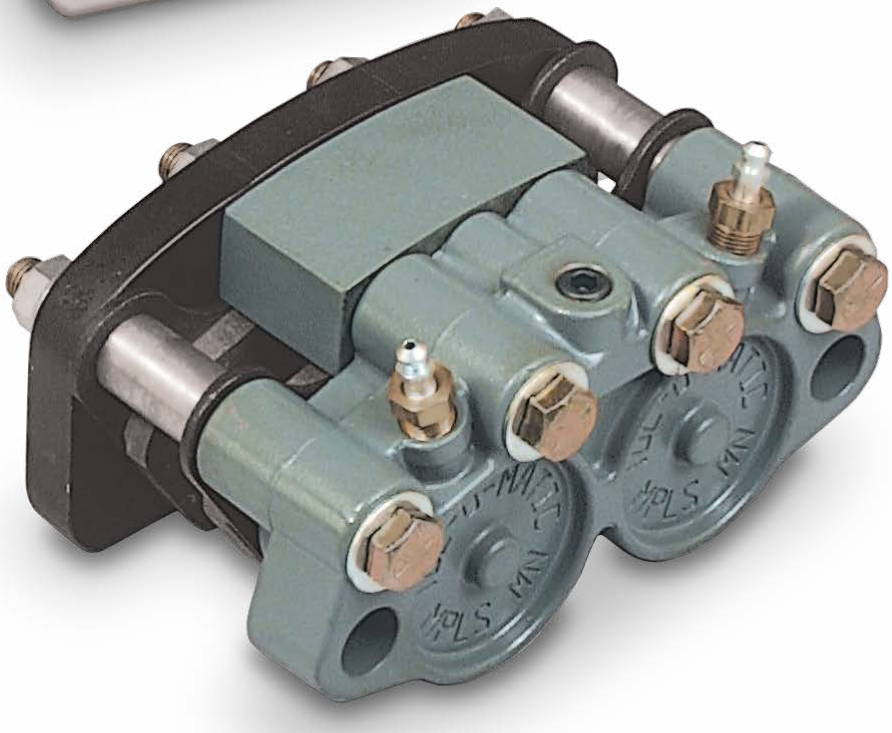

OVER 70 YEARS OF PROVEN PERFORMANCE

TOLOMATIC HAS THE RESOURCES TO HELP YOU GET WHAT YOU NEED.

Products and people you need to get the job done right.

At Tolomatic we have the resources and the experience to give you what you need when you need it. Working together we can find solutions whether it is a new feature, better performance or a whole new product line. Our sales department will make sure all your questions are answered. Our engineers will assist you with your application design. Our model shop will make all the tooling and specials you need for a new product —not in 6 months or a year—but when you need them.

Quality products, competitively priced, when you want them.

Our engineering laboratory pushes our products to the breaking point running them 24 hours a day, 7 days a week for millions of cycles looking for ways to improve them. They work with R&D to develop new manufacturing techniques and to perfect new products. For each new product, detailed engineered drawings are converted into hand-crafted sample products for testing, then precision tooling is built on site by Tolomatic's own skilled craftsmen with the highest standards of quality, care and dedication to details. The products are tested again by engineering and by selected field representatives. Tolomatic has heavily invested in research to guarantee you delivery of the highest quality products not in months or weeks, but within days of your order, and with a warranty rate less than 1/2 of 1%.

Unconditional 100% satisfaction guarantee.

Tolomatic has built its reputation on customer satisfaction. For over 70 years it has been our policy that, if for any reason you have a problem with any Tolomatic product ordered, we will do whatever it takes to make sure you are 100% satisfied. Working together we will arrive at a solution that works best for you.

Tolomatic training center

There is a Tolomatic product for just about every application that may come your way and it is our goal to remove every obstacle, give you every tool, device and piece of knowledge necessary to learn how to size and apply Tolomatic products. That is why we supply the most advanced in-depth training in the industry— free of charge to all our distributors and their customers.



Located in west suburban Minneapolis, Minnesota, Tolomatic headquarters (a 100,000 sq. ft. state-of-the-art facility) is designed for improved communication and manufacturing techniques to meet customer needs today and well into the future.

© 2026 Tolomatic, Inc. All rights reserved. No part of this publication may be reproduced, transmitted, transcribed, stored in a retrieval system, or translated into any language in any form by any means without the written permission of Tolomatic, Inc.

Tolomatic, Axidyne, and Excellence in Motion are registered trademarks, Tolomatic, Inc. Other product and corporate names may be trademarks of other companies, and are used only for explanation and to the owner's benefit, without intent to infringe.

Information furnished in this catalog is believed to be accurate and reliable. However, Tolomatic assumes no responsibility for its use or for any errors that may appear in this document. Tolomatic reserves the right to change the design or operation of the equipment described herein and any associated motion products without notice. Information in this document is subject to change without notice.

202611241118 • 5M

Contents

INTRODUCTION

DEDICATED TO YOUR SATISFACTION . . ii
WORLD CLASS PRODUCTS iii
TOLOMATIC ON THE INTERNET iv

RIGHT ANGLE GEARBOXES

SLIDE-RITE GEARBOX 2
ENDURANCE TECHNOLOGY . 2
APPLICATION EXAMPLE. . . . 3
COMPACT SERIES 4
1:1 Ratio; US & Metric. 4
1:1 Ratio; CR-US. 4
STANDARD SERIES. 5
1:1 Ratio; US & Metric. 5
1:1 Ratio; CR-US. 5
3:2 Ratio; US 6
2:1 Ratio, US. 7
FLOAT-A-SHAFT 8
APPLICATIONS 8
INTRODUCTION. 9
COMPACT SERIES 10
1:1 Ratio; US & Metric. 10
STANDARD SERIES. 13
1:1 Ratio; US & Metric. 13
3:2 Ratio; US & Metric. . . . 14
2:1 Ratio; US & Metric. . . . 19
2.5:1 Ratio; US 22
Float-A-Shaft & Slide-Rite Gearbox Selection 23
Installation. 24
Shaft & Keyway Requirements . 24

CALIPER DISC BRAKES

FEATURES 26
APPLICATIONS 28
SELECTION GRAPHS. 29
PNEUMATIC BRAKES. 32
P10 32
P20 34
P220. 36
HYDRAULIC BRAKES 38
H10 38
H20 40
H220. 42
H220I 44
H441. 46
H960. 48
HYDRAULIC/MECHANICAL BRAKE COMBOS 50
H/ME220. 50
MECHANICAL BRAKES 52
ME10 52
ME20 55
ME220 58
MB3 60
SPRING APPLIED BRAKES 62
FS20. 62
FS220B. 64
FS220C. 66
FS220BI 68
FS220CI 70
FS595. 72
FS595 DUAL 74
DISCS HUBS & BUSHINGS 76
Hub & Disc Assemblies. 76
Fixed Hub & Disc. 76
Hub & Disc with QD Bushings 78
QD Bushings. 82
One Piece Hub & Disc / Blank Disc 82
Disc With Pilot Hole / Intensifier 83
CALIPER DISC BRAKE SELECTION . . 85
APPLICATION DATA WORKSHEET . . 92

ENGINEERING RESOURCES

CONVERSION TABLES 93
TERMS / CONDITIONS OF SALE. 95

The Tolomatic Difference

OVER 70 Years of Proven Performance

EXCELLENT TECHNICAL SUPPORT



OUR PEOPLE MAKE THE DIFFERENCE!

Expect prompt, courteous replies to all of your application and product questions.

INDUSTRY LEADING DELIVERIES



FAST DELIVERY ON STANDARD CATALOG PRODUCTS

- same day for many items. Modified and custom products ship weeks ahead of the competition. Every product is built with **ENDURANCE TECHNOLOGY**℠ components and quality tested before shipment.

CONVENIENT ORDERING

ORDER ONLINE

www.tolomatic.com - Be assured of speedy service, quality products and great pricing, all at your convenience.

The Tolomatic Difference

OVER 70 Years of Proven Performance

CREATIVE SOLUTIONS…ENGINEERED DAILY

STANDARD PRODUCTS



ISO 9001 quality procedures combined with **ENDURANCE TECHNOLOGY**℠ *for trouble-free installation and start-up.*

- Over 35 distinct product lines detailed in over 4,000 web pages.
- User specified stroke length is standard.

MODIFIED PRODUCTS



Modified products, like this spring applied brake with modified pressure chamber for low pressure release, extend the range of environments and applications where Tolomatic products can be used.

- Modifications include user specified tapped holes, materials, lubricants, coatings, and/or mounting brackets.

CUSTOM PRODUCTS

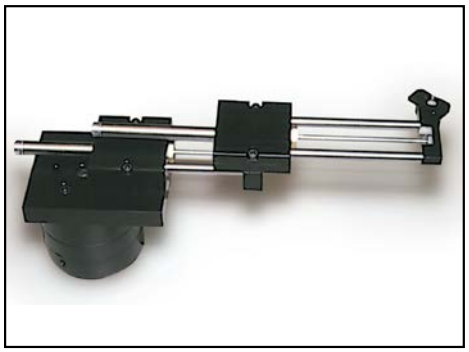

Challenges like this multi-axis actuator built to fit a manufacturer's motion, space and accuracy requirements are a regular part of our daily activities.

- Custom solutions for unique motion requirements.
- We will work with you to design a motion product within your space, budget, and time requirements.

The Tolomatic Difference

A USEFUL WEB SITE: www.tolomatic.com

COMPLETE INFORMATION AVAILABLE ONLINE

PRODUCT SUPPORT AVAILABLE 24/7 AT www.tolomatic.com

Our web site is your definitive source for EVERYTHING you need to know about Tolomatic and our products.

Check the home page for news and featured products

Search tool gets the information you need - fast!

2D drawings and 3D models available on the web

- Available in many popular formats

Tolomatic engineers are available to help with your power transmission challenges

Scroll right or left for more product information

Most power transmission products are available to order online

Click here to hide or reveal these subjects

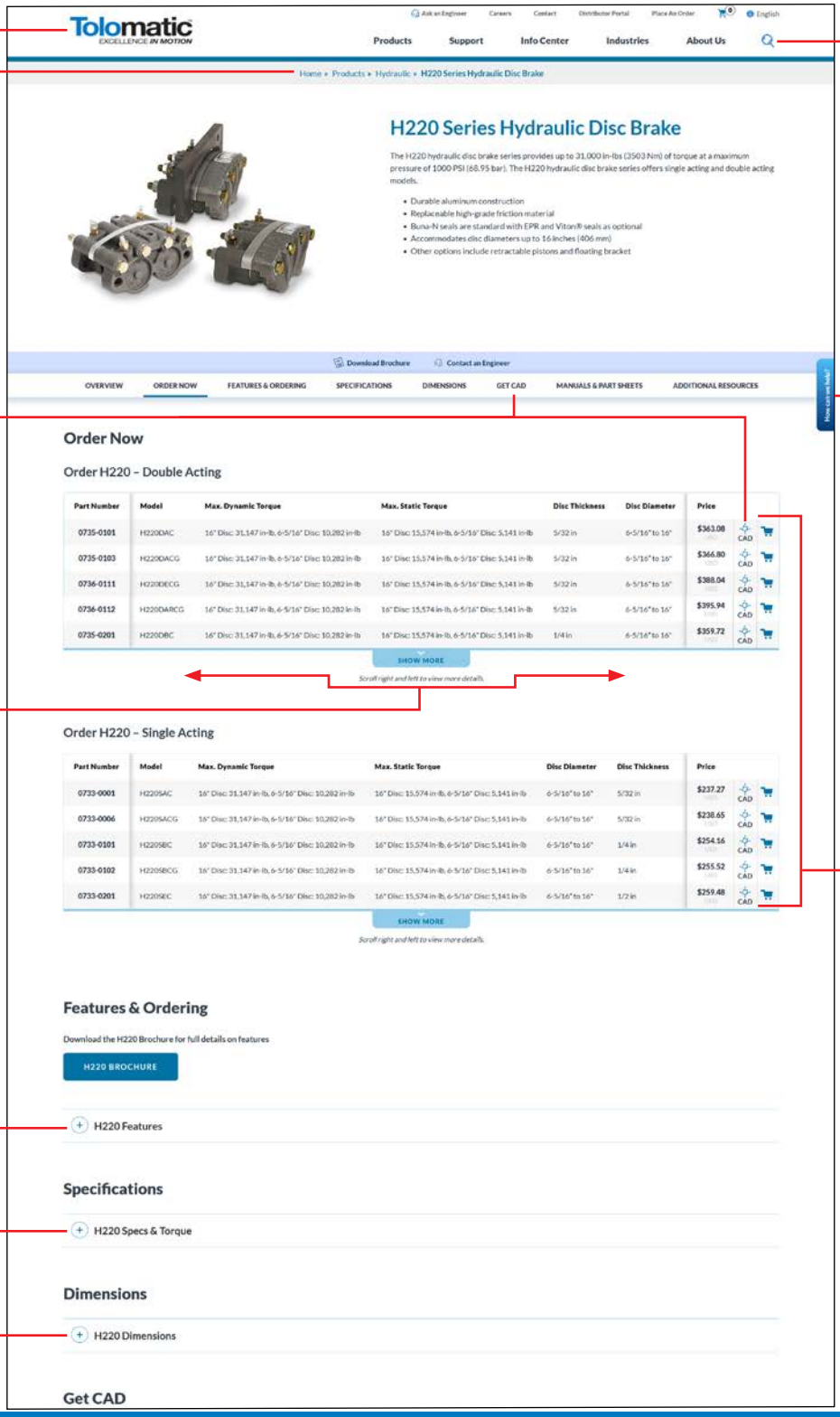

Gearboxes ORDER ONLINE



SLIDE-RITE™ GEARBOX and SLIDE-RITE™CR GEARBOX

Pages 2 through 7



FLOAT-A-SHAFT (FAS) GEARBOX

Pages 8 through 24

Visit www.tolomatic.com for the latest updates, CAD files and ordering.

GEARBOXES
SLIDE-RITE GEARBOX
ENDURANCE TECHNOLOGY
APPLICATION EXAMPLE
COMPACT SERIES 1:1 RATIO
STANDARD SERIES 1:1 RATIO
STANDARD SERIES 3:2 RATIO
STANDARD SERIES 2:1 RATIO
FLOAT-A-SHAFT
APPLICATIONS
INTRODUCTION
COMPACT SERIES 1:1 RATIO
STANDARD SERIES 1:1 RATIO
STANDARD SERIES 3:2 RATIO
STANDARD SERIES 2:1 RATIO
STANDARD SERIES 2.5:1 RATIO
SELECTION
INSTALLATION
SHAFT & KEYWAY REQUIREMENTS

Slide-Rite® & Slide-Rite®CR Gearbox

ORDER ONLINE

COMPACT SIZE & STANDARD SIZE

The **Slide-Rite®**, like the classic **Float-A-Shaft®**, is a universal right angle gearbox. It consists of two 45° helical gears that mesh at right angles, designed to turn power at 90°. It can be operated in either direction and can slide axially along the drive or driven shaft.

The **Slide-Rite®** gearbox's unique floating design maintains perfect shaft alignment allowing for easy installation.

A solid one-piece aluminum housing seals the gears from outside contaminants, providing for smooth operation in even the harshest industrial environments.

ENDURANCE TECHNOLOGY℠

A Tolomatic Design Principle

Look for this endurance technology symbol indicating our durability design features

LEAK-PROOF PERFORMANCE

One-piece housing, one-piece geared shaft and sealed bearings offer leak-proof performance and excellent service life

PRELUBRICATED

Prelubricated for long, trouble-free service

ONE-PIECE GEARED SHAFT

Fewer parts to wear out

USES STANDARD TRANSMISSION SHAFTING

HARD COATED ALUMINUM CASE

Resists corrosion and forms its own lubricant reservoir

THREADED MOUNTING HOLES

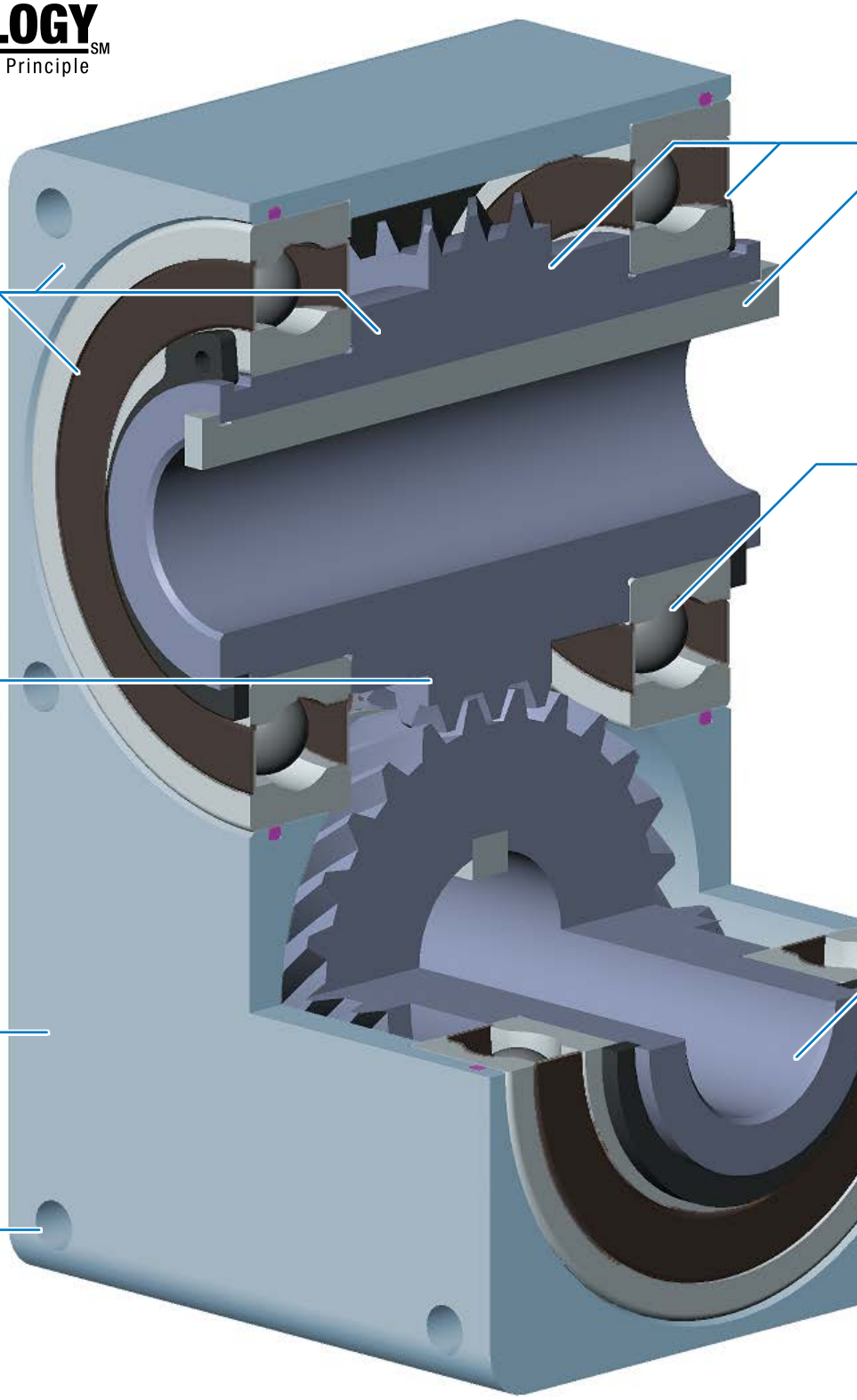

Slide-Rite® & Slide-Rite®CR Gearbox ORDER ONLINE

The specially selected corrosion resistant components of the **Slide-Rite®CR** Gearbox make it the perfect choice for environmentally challenging applications.

SLIDE-RITE®CR FEATURES:

HELICAL GEARS, KEYS, RETAINING RINGS

ALLOY STEEL
- 45 degree helical gears are hardened alloy steel
- High performance, long life construction

NICKEL PLATED
Corrosion resistant electroless nickel-plated geared sleeves, keys and retaining rings

BEARINGS AND BEARING RACES

HARDENED STEEL
High performance, long life materials

STAINLESS STEEL
Corrosion resistant stainless steel balls and races

PRECISION GROUND BORES



SPECIFICATIONS

- Max speed: 1,200 RPM
- Backlash: < 1 degree
- Bidirectional
- Slide through bore: limited only by length of keyway on shaft

Specifications and endurance technology features apply to all sizes of Slide-Rite® gearboxes.

APPLICATION EXAMPLE

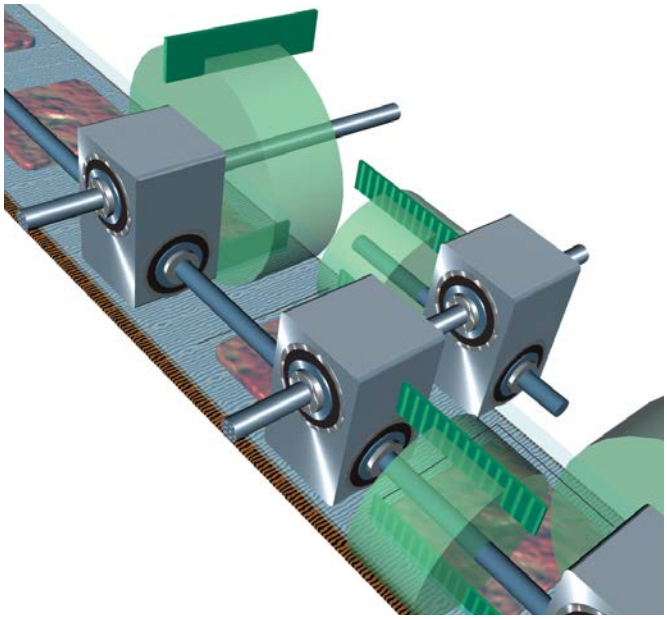

Application Description:

A manufacturer of frozen pizzas needed a way to cut and seal the plastic packaging for multiple sizes of their signature square pizza.

Application Requirements:

- Output of 60 pizzas per minute
- 4" adjustment range
- No maintenance - washdown environment

Tolomatic Solution: Slide-Rite®CR Gearboxes

The sealed, high speed, corrosion resistant design of the Slide-Rite®CR provides the high throughput necessary in this application. Other important application design features: Using multiple right angle gearboxes, a single motor, located outside the wash down area, synchronously drives both cutting and sealing units. The slide through bore feature of the Slide-Rite® offers adjustability for several pizza sizes.

Slide-Rite® & Slide-Rite®CR Gearbox ORDER ONLINE

COMPACT SIZE – 1:1 RATIO – U.S. & METRIC

AVAILABLE STYLES

1:1 US STANDARD
1:1 METRIC



1:1 SLIDE-RITE®CR; US STANDARD



DIMENSIONS

Model Builder 3D CAD Available at: www.tolomatic.com

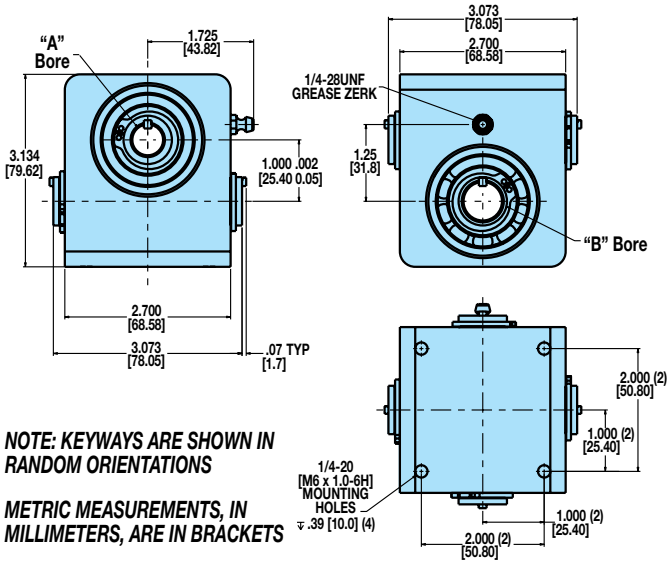

NOTE: KEYWAYS ARE SHOWN IN RANDOM ORIENTATIONS

METRIC MEASUREMENTS, IN MILLIMETERS, ARE IN BRACKETS

PERFORMANCE DATA

High Torque Ball Bearings

Torque and Efficiency vs RPM at Maximum Operating Temperature

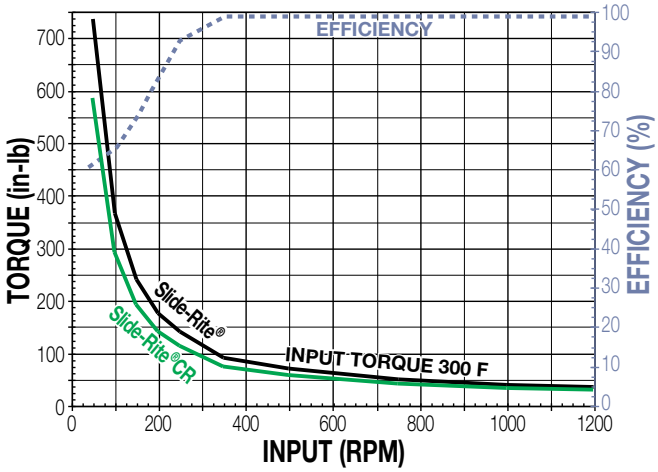

Models and Bore Dimensions

COMPACT SIZE – 1:1 RATIO – U.S.

HIGH TORQUE BALL BEARING

SLIDE-RITE® MODEL NUMBER	SLIDE-RITE®CR MODEL NUMBER	RH or LH	"A" BORE		"B" BORE		APPROX. WEIGHT (LBS.)
			BORE SIZE (IN.)	WxD KEYWAY (IN.)	BORE SIZE (IN.)	WxD KEYWAY (IN.)	
0120-0400	0120-0420	RH	1/2	1/8 x 1/16	1/2	1/8 x 1/16	2.7
0121-0400	0121-0420	LH	1/2	1/8 x 1/16	1/2	1/8 x 1/16	2.7
0122-0400	0122-0420	RH	1/2	1/8 x 1/16	5/8	1/8 x 1/16	2.6
0123-0400	0123-0420	LH	1/2	1/8 x 1/16	5/8	1/8 x 1/16	2.6
0124-0400	0124-0420	RH	5/8	1/8 x 1/16	5/8	1/8 x 1/16	2.5
0125-0400	0125-0420	LH	5/8	1/8 x 1/16	5/8	1/8 x 1/16	2.5

COMPACT SIZE – 1:1 RATIO – METRIC

HIGH TORQUE BALL BEARING

MODEL NUMBER	RH or LH	"A" BORE		"B" BORE		APPROX. WEIGHT (kg.)
		BORE SIZE (mm)	WxD KEYWAY (mm)	BORE SIZE (mm)	WxD KEYWAY (mm)	
0120-0410	RH	12	4 x 2	12	4 x 2	1.2
0121-0410	LH	12	4 x 2	12	4 x 2	1.2
0122-0410	RH	12	4 x 2	15	5 x 2.5	1.2
0123-0410	LH	12	4 x 2	15	5 x 2.5	1.2
0124-0410	RH	15	5 x 2.5	15	5 x 2.5	1.1
0125-0410	LH	15	5 x 2.5	15	5 x 2.5	1.1

Slide-Rite® & Slide-Rite®CR Gearbox ORDER ONLINE

STANDARD SIZE – 1:1 RATIO – U.S. & METRIC

AVAILABLE STYLES

1:1 US STANDARD
1:1 METRIC



1:1 SLIDE-RITE®CR; US STANDARD



DIMENSIONS

Model Builder 3D CAD Available at: www.tolomatic.com

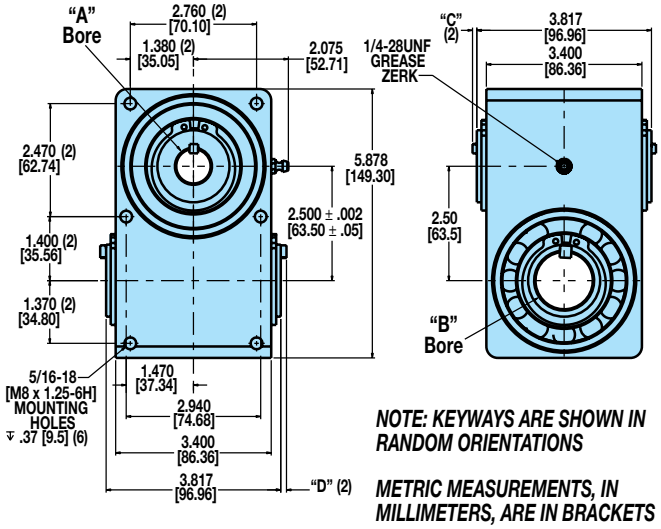

NOTE: KEYWAYS ARE SHOWN IN RANDOM ORIENTATIONS

METRIC MEASUREMENTS, IN MILLIMETERS, ARE IN BRACKETS

PERFORMANCE DATA

High Torque Ball Bearings

Torque and Efficiency vs RPM at Maximum Operating Temperature

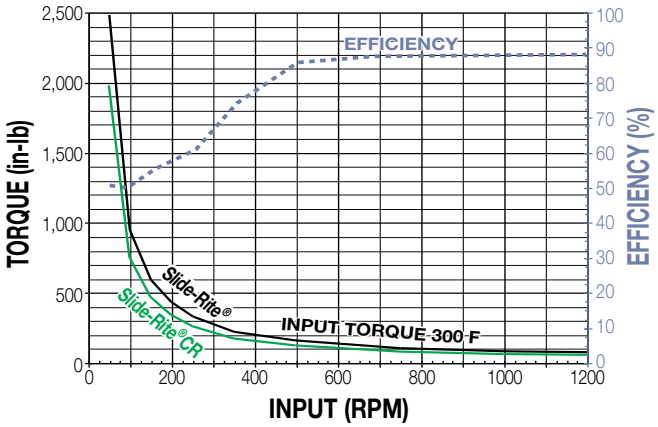

Models and Bore Dimensions

STANDARD SIZE – 1:1 RATIO – U.S.

HIGH TORQUE BALL BEARING

SLIDE-RITE® MODEL NUMBER	SLIDE-RITE®CR MODEL NUMBER	RH or LH	"A" BORE			"B" BORE			APPROX. WEIGHT (LBS.)
			BORE SIZE (IN.)	WxD KEYWAY (IN.)	"C" DIM. (IN.)	BORE SIZE (IN.)	WxD KEYWAY (IN.)	"D" DIM. (IN.)	
0220-0400	0220-0420	RH	3/4	3/16 x 3/32	.10	3/4	3/16 x 3/32	.10	10.7
0221-0400	0221-0420	LH	3/4	3/16 x 3/32	.10	3/4	3/16 x 3/32	.10	10.7
0222-0400	0222-0420	RH	3/4	3/16 x 3/32	.10	1	1/4 x 1/8	.13	10.4
0223-0400	0223-0420	LH	3/4	3/16 x 3/32	.10	1	1/4 x 1/8	.13	10.4
0224-0400	0224-0420	RH	3/4	3/16 x 3/32	.10	1-1/4	1/4 x 1/8	.13	9.9
0225-0400	0225-0420	LH	3/4	3/16 x 3/32	.10	1-1/4	1/4 x 1/8	.13	9.9
0226-0400	0226-0420	RH	1	1/4 x 1/8	.13	1	1/4 x 1/8	.13	10.0
0227-0400	0227-0420	LH	1	1/4 x 1/8	.13	1	1/4 x 1/8	.13	10.0
0228-0400	0228-0420	RH	1	1/4 x 1/8	.13	1-1/4	1/4 x 1/8	.13	9.6
0229-0400	0229-0420	LH	1	1/4 x 1/8	.13	1-1/4	1/4 x 1/8	.13	9.6
0230-0400	0230-0420	RH	1-1/4	1/4 x 1/8	.13	1-1/4	1/4 x 1/8	.13	9.1
0231-0400	0231-0420	LH	1-1/4	1/4 x 1/8	.13	1-1/4	1/4 x 1/8	.13	9.1

STANDARD SIZE – 1:1 RATIO – METRIC

HIGH TORQUE BALL BEARING

MODEL NUMBER	RH or LH	"A" BORE			"B" BORE			APPROX. WEIGHT (kg.)
		BORE SIZE (mm)	WxD KEYWAY (mm)	"C" DIM. (mm)	BORE SIZE (mm)	WxD KEYWAY (mm)	"D" DIM. (mm)	
0220-0410	RH	20	6 x 3	3.2	20	6 x 3	3.2	4.8
0221-0410	LH	20	6 x 3	3.2	20	6 x 3	3.2	4.8
0222-0410	RH	20	6 x 3	3.2	25	8 x 3.5	3.2	4.7
0223-0410	LH	20	6 x 3	3.2	25	8 x 3.5	3.2	4.7
0224-0410	RH	20	6 x 3	3.2	30	8 x 3.5	3.2	4.5
0225-0410	LH	20	6 x 3	3.2	30	8 x 3.5	3.2	4.5
0226-0410	RH	25	8 x 3.5	3.2	25	8 x 3.5	3.2	4.5
0227-0410	LH	25	8 x 3.5	3.2	25	8 x 3.5	3.2	4.5
0228-0410	RH	25	8 x 3.5	3.2	30	8 x 3.5	3.2	4.4
0229-0410	LH	25	8 x 3.5	3.2	30	8 x 3.5	3.2	4.4
0230-0410	RH	30	8 x 3.5	3.2	30	8 x 3.5	3.2	4.2
0231-0410	LH	30	8 x 3.5	3.2	30	8 x 3.5	3.2	4.2

Slide-Rite® Gearbox ORDER ONLINE

STANDARD SIZE – 3:2 RATIO – U.S.

AVAILABLE STYLES

3:2 US STANDARD



DIMENSIONS

Model Builder 3D CAD Available at: www.tolomatic.com

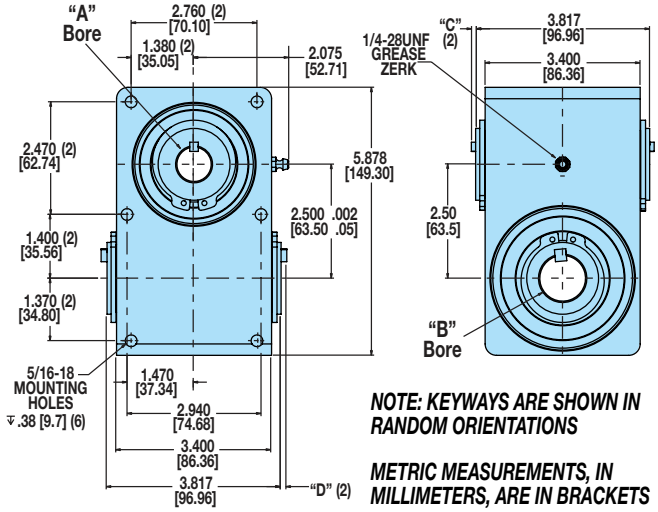

NOTE: KEYWAYS ARE SHOWN IN RANDOM ORIENTATIONS

METRIC MEASUREMENTS, IN MILLIMETERS, ARE IN BRACKETS

PERFORMANCE DATA

High Torque Ball Bearings

Torque and Efficiency vs RPM at Maximum Operating Temperature

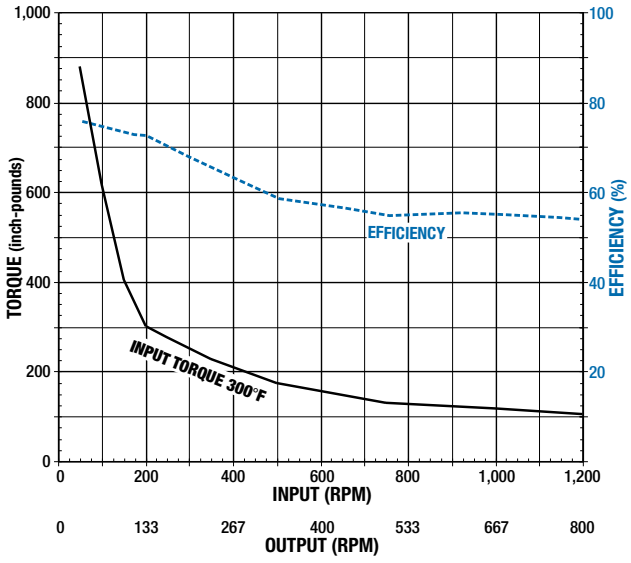

Models and Bore Dimensions

STANDARD SIZE – 3:2 RATIO – U.S.

HIGH TORQUE BALL BEARING

MODEL NUMBER	RH *or* LH	"A" BORE			"B" BORE			APPROX. WEIGHT (LBS.)
		BORE SIZE (IN.)	WxD KEYWAY (IN.)	"C" DIM. (IN.)	BORE SIZE (IN.)	WxD KEYWAY (IN.)	"D" DIM. (IN.)	
0320-0460	RH	3/4	3/16 x 3/32	.10	3/4	3/16 x 3/32	.10	10.3
0321-0460	LH	3/4	3/16 x 3/32	.10	3/4	3/16 x 3/32	.10	10.3
0322-0460	RH	3/4	3/16 x 3/32	.10	1	1/4 x 1/8	.13	10.0
0323-0460	LH	3/4	3/16 x 3/32	.10	1	1/4 x 1/8	.13	10.0
0324-0460	RH	3/4	3/16 x 3/32	.10	1-1/4	1/4 x 1/8	.13	9.5
0325-0460	LH	3/4	3/16 x 3/32	.10	1-1/4	1/4 x 1/8	.13	9.5
0326-0460	RH	1	1/4 x 1/8	.13	1	1/4 x 1/8	.13	9.6
0327-0460	LH	1	1/4 x 1/8	.13	1	1/4 x 1/8	.13	9.6
0328-0460	RH	1	1/4 x 1/8	.13	1-1/4	1/4 x 1/8	.13	9.1
0329-0460	LH	1	1/4 x 1/8	.13	1-1/4	1/4 x 1/8	.13	9.1
0330-0460	RH	1-1/4	1/4 x 1/8	.13	1-1/4	1/4 x 1/8	.13	8.7
0331-0460	LH	1-1/4	1/4 x 1/8	.13	1-1/4	1/4 x 1/8	.13	8.7

Slide-Rite® Gearbox ORDER ONLINE

STANDARD SIZE – 2:1 RATIO – U.S.

AVAILABLE STYLES

2:1 US STANDARD



DIMENSIONS

Model Builder 3D CAD Available at: www.tolomatic.com

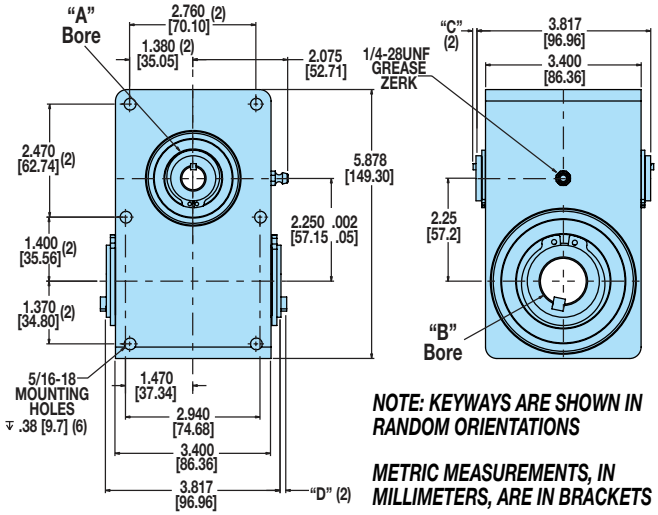

NOTE: KEYWAYS ARE SHOWN IN RANDOM ORIENTATIONS

METRIC MEASUREMENTS, IN MILLIMETERS, ARE IN BRACKETS

PERFORMANCE DATA

High Torque Ball Bearings

Torque and Efficiency vs RPM at Maximum Operating Temperature

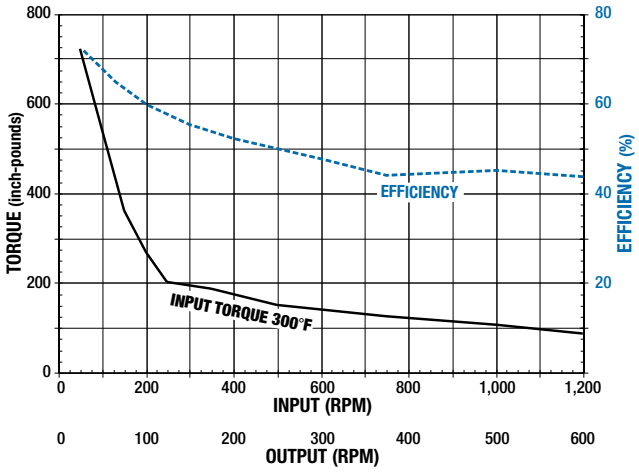

Models and Bore Dimensions

STANDARD SIZE – 2:1 RATIO – U.S.

HIGH TORQUE BALL BEARING

MODEL NUMBER	RH or LH	"A" BORE			"B" BORE			APPROX. WEIGHT (LBS.)
		BORE SIZE (IN.)	WxD KEYWAY (IN.)	"C" DIM. (IN.)	BORE SIZE (IN.)	WxD KEYWAY (IN.)	"D" DIM. (IN.)	
0220-0460	RH	1/2	1/8 x 1/16	.07	3/4	3/16 x 3/32	.10	10.7
0221-0460	LH	1/2	1/8 x 1/16	.07	3/4	3/16 x 3/32	.10	10.7
0222-0460	RH	1/2	1/8 x 1/16	.07	1	1/4 x 1/8	.13	10.4
0223-0460	LH	1/2	1/8 x 1/16	.07	1	1/4 x 1/8	.13	10.4
0224-0460	RH	1/2	1/8 x 1/16	.07	1-1/4	1/4 x 1/8	.13	9.9
0225-0460	LH	1/2	1/8 x 1/16	.07	1-1/4	1/4 x 1/8	.13	9.9
0226-0460	RH	5/8	1/8 x 1/16	.07	3/4	3/16 x 3/32	.10	10.0
0227-0460	LH	5/8	1/8 x 1/16	.07	3/4	3/16 x 3/32	.10	10.0
0228-0460	RH	5/8	1/8 x 1/16	.07	1	1/4 x 1/8	.13	9.6
0229-0460	LH	5/8	1/8 x 1/16	.07	1	1/4 x 1/8	.13	9.6
0230-0460	RH	5/8	1/8 x 1/16	.07	1-1/4	1/4 x 1/8	.13	9.1
0231-0460	LH	5/8	1/8 x 1/16	.07	1-1/4	1/4 x 1/8	.13	9.1
0232-0460	RH	3/4	3/16 x 3/32	.10	3/4	3/16 x 3/32	.10	10.0
0233-0460	LH	3/4	3/16 x 3/32	.10	3/4	3/16 x 3/32	.10	10.0
0234-0460	RH	3/4	3/16 x 3/32	.10	1	1/4 x 1/8	.13	9.6
0235-0460	LH	3/4	3/16 x 3/32	.10	1	1/4 x 1/8	.13	9.6
0236-0460	RH	3/4	3/16 x 3/32	.10	1-1/4	1/4 x 1/8	.13	9.1
0237-0460	LH	3/4	3/16 x 3/32	.10	1-1/4	1/4 x 1/8	.13	9.1

Float-A-Shaft Gearbox

ORDER ONLINE

APPLICATIONS

YOU CAN'T FIND A MORE FLEXIBLE GEAR DRIVE

If the distances between take-ups are varied during operation, both shafts can be slid axially through the Float-A-Shaft. They're available in right or left hand drives to meet your exact requirements. And what's more, the shaft's direction is reversible to suit your changing operation.

FLOAT-A-SHAFT IS EASILY INSTALLED

An ingenious installation technique and one piece assembly eliminates coupling and shaft alignment problems.

Tolomatic makes the best right angle gear drives you can buy. We're out to prove that no one can get you around a corner faster than Tolomatic.

NOTE: Pillow block bearing supports are recommended on all Float-A-Shaft applications. Effectively mounted directly between the Float-A-Shaft unit and the load, the pillow block bearing supports will absorb any shaft deflection or sideloading and assure alignment.

NOTE: All Float-A-Shaft units have 3° to 5° of backlash on reversal of input.

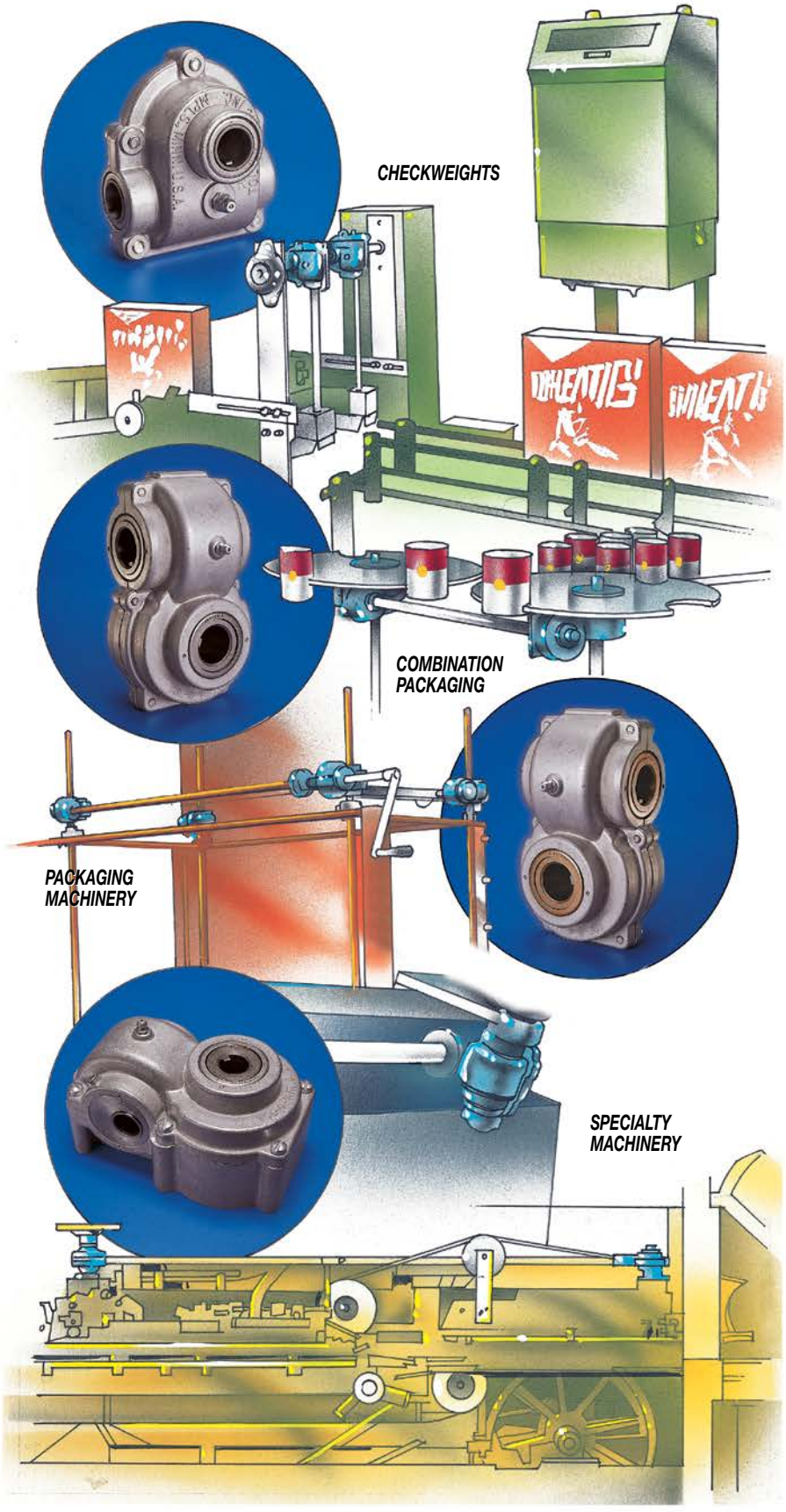

Float-A-Shaft Gearbox ORDER ONLINE

INTRODUCTION

TOLOMATIC IS TURNING THINGS AROUND

Tolomatic's Float-A-Shaft right angle gear drive was invented 70 years ago, and the competition still hasn't caught up. That's because Tolomatic gearboxes "float" on rotating shafts. Along with the Slide-Rite gearbox, no other design has the versatility, durability, safety, or the ease of operation as Float-A-Shaft.

Float-A-Shaft is a universal right angle gear drive coupling. It consists of two 45° helical gears that mesh at right angles, designed to turn power around any corner. Float-A-Shaft can be operated in either direction and can slide axially along the drive or driven shaft.

A lightweight aluminum housing encloses the gears, serving as a structural support and a lubricant reservoir. The gears mount directly on the shafts through keyways in the gears and shafts. These rugged and durable hardened helical gears have been field-proven for 70 years, assuring dependable operation. Yet with all of that, Float-A-Shaft retains a compact design well suited for use in tight quarters.

Float-A-Shaft's unique floating design maintains perfect alignment. It also eliminates dangerous chain sprocket drives and the additional adjustments required for chain drive applications.

LOW TORQUE JOURNAL BEARING SERIES

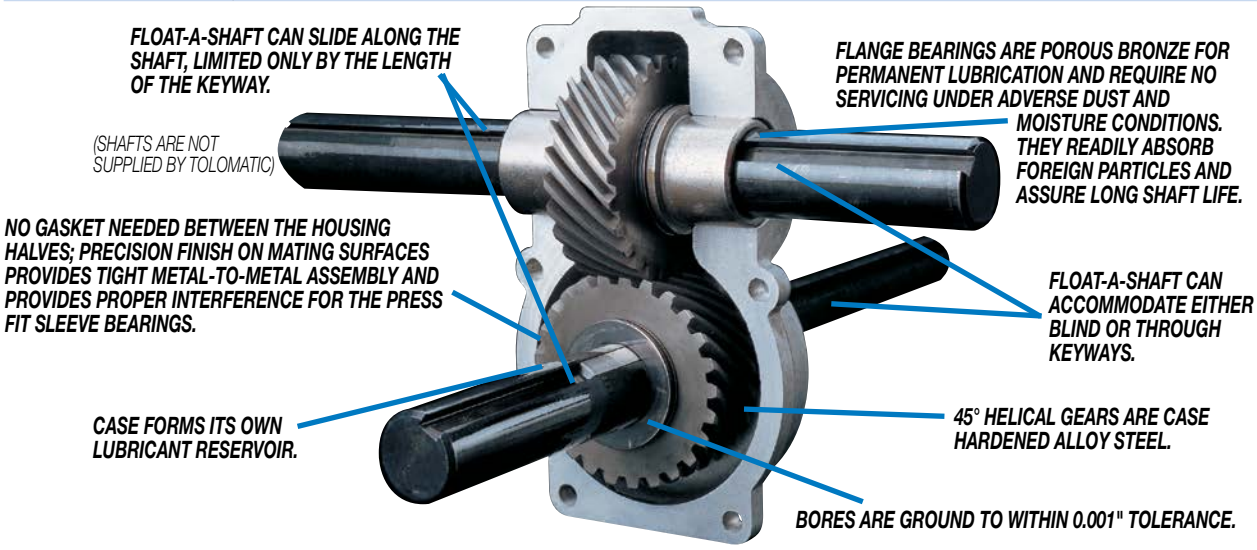

HIGH TORQUE ROLLER BEARING SERIES

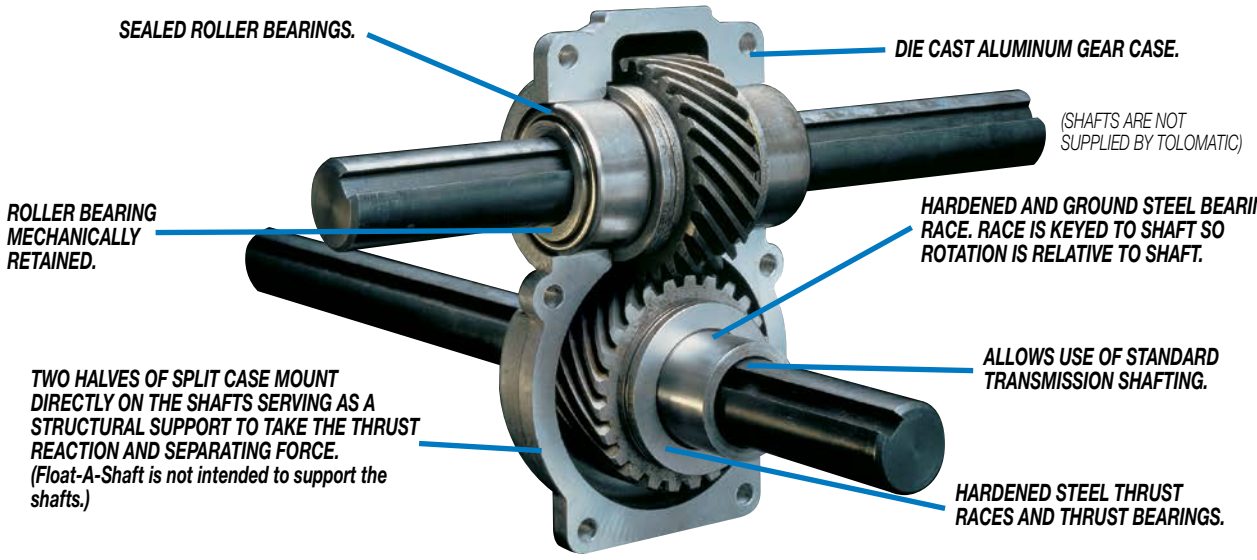

Float-A-Shaft Gearbox

ORDER ONLINE

COMPACT SERIES - 1:1 RATIO - US & METRIC

AVAILABLE STYLES

Low Torque Journal Bearings

Standard

1-1/2 lbs. (0.68 kgs.)



Foot Mount

1-3/4 lbs. (0.79 kgs.)



AVAILABLE STYLES

High Torque Roller Bearings

Standard

1-1/2 lbs. (0.68 kgs.)



Foot Mount

1-3/4 lbs. (0.79 kgs.)



PERFORMANCE DATA

Low Torque Journal Bearings

Torque and Efficiency vs RPM at Maximum Bearing Temperature

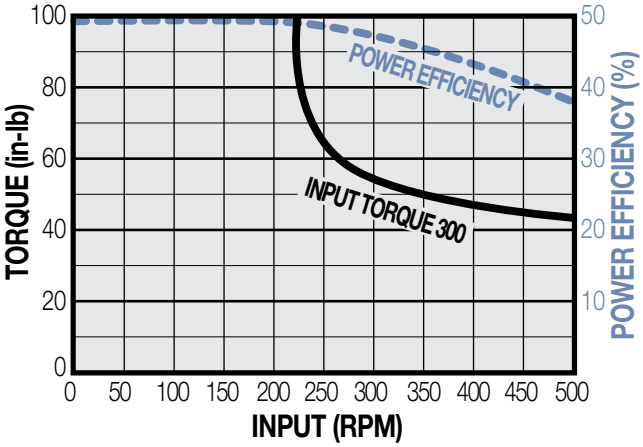

PERFORMANCE DATA

High Torque Roller Bearings

Torque and Efficiency vs RPM at Maximum Bearing Temperature

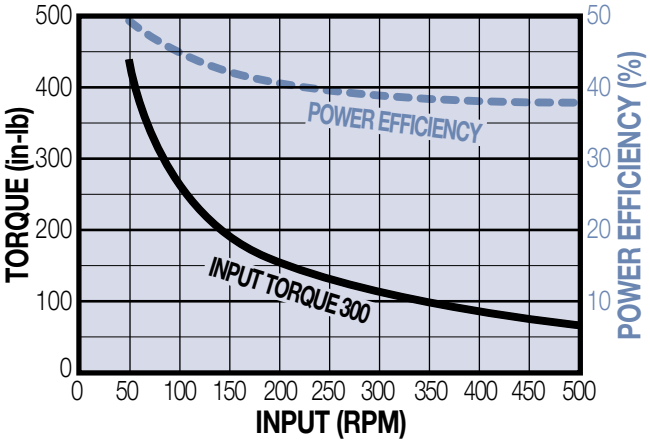

DIMENSIONS: COMPACT STANDARD HIGH TORQUE & LOW TORQUE BEARINGS

Model Builder 3D CAD Available at: www.tolomatic.com

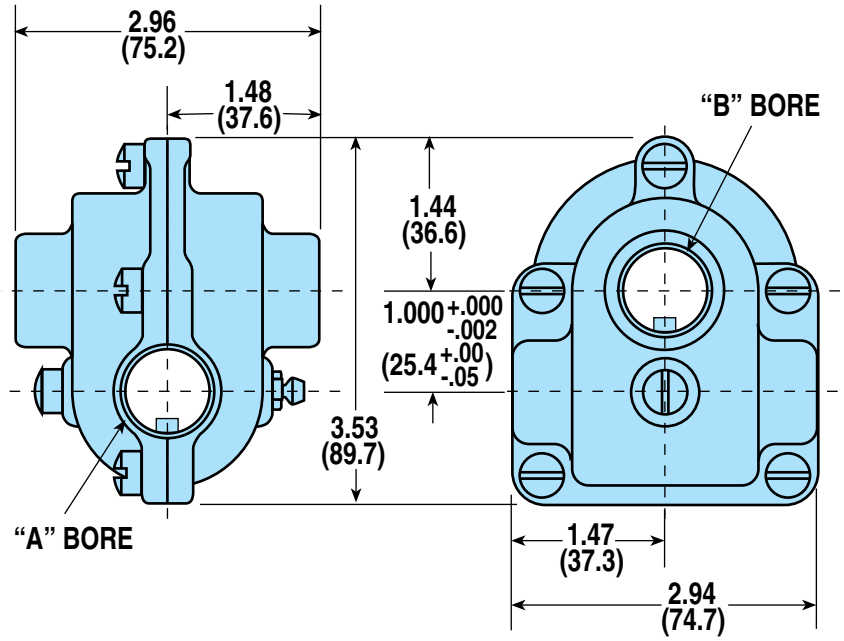

NOTE: KEYWAYS ARE SHOWN IN RANDOM POSITIONS.

METRIC MEASUREMENTS, IN MILLIMETERS, ARE IN PARENTHESES

Models and Bore Dimensions

U.S. - COMPACT STANDARD - 1:1

LOW TORQUE JOURNAL BEARING & HIGH TORQUE ROLLER BEARING

LOW TORQUE JOURNAL MODEL NO.	HIGH TORQUE ROLLER MODEL NO.	RH OR LH	"A" BORE		"B" BORE	
			BORE SIZE (IN.)	WxD KEYWAY (IN.)	BORE SIZE (IN.)	WxD KEYWAY (IN.)
0106-0000	0105-0100	RH	1/2	1/8 x 1/16	1/2	1/8 x 1/16
0105-0000	0106-0100	LH	1/2	1/8 x 1/16	1/2	1/8 x 1/16
0108-0000	0107-0100	RH	1/2	1/8 x 1/16	5/8	1/8 x 1/16
0107-0000	0108-0100	LH	1/2	1/8 x 1/16	5/8	1/8 x 1/16
0110-0000	0109-0100	RH	5/8	1/8 x 1/16	5/8	1/8 x 1/16
0109-0000	0110-0100	LH	5/8	1/8 x 1/16	5/8	1/8 x 1/16

METRIC - COMPACT STANDARD - 1:1

HIGH TORQUE ROLLER BEARING

HIGH TORQUE ROLLER MODEL NO.	RH OR LH	"A" BORE		"B" BORE	
		BORE SIZE (MM)	WxD KEYWAY (MM)	BORE SIZE (MM)	WxD KEYWAY (MM)
0120-0100	RH	12	4 x 2	12	4 x 2
0121-0100	LH	12	4 x 2	12	4 x 2
0122-0100	RH	12	4 x 2	15	5 x 2.5
0123-0100	LH	12	4 x 2	15	5 x 2.5
0124-0100	RH	15	5 x 2.5	15	5 x 2.5
0125-0100	LH	15	5 x 2.5	15	5 x 2.5

NOTE: METRIC SIZES AVAILABLE ONLY IN HIGH TORQUE ROLLER BEARING MODELS.

Float-A-Shaft Gearbox

ORDER ONLINE

COMPACT SERIES - 1:1 RATIO - US & METRIC

DIMENSIONS: COMPACT FOOT MOUNT HIGH TORQUE & LOW TORQUE BEARINGS

Model Builder 3D CAD Available at: www.tolomatic.com

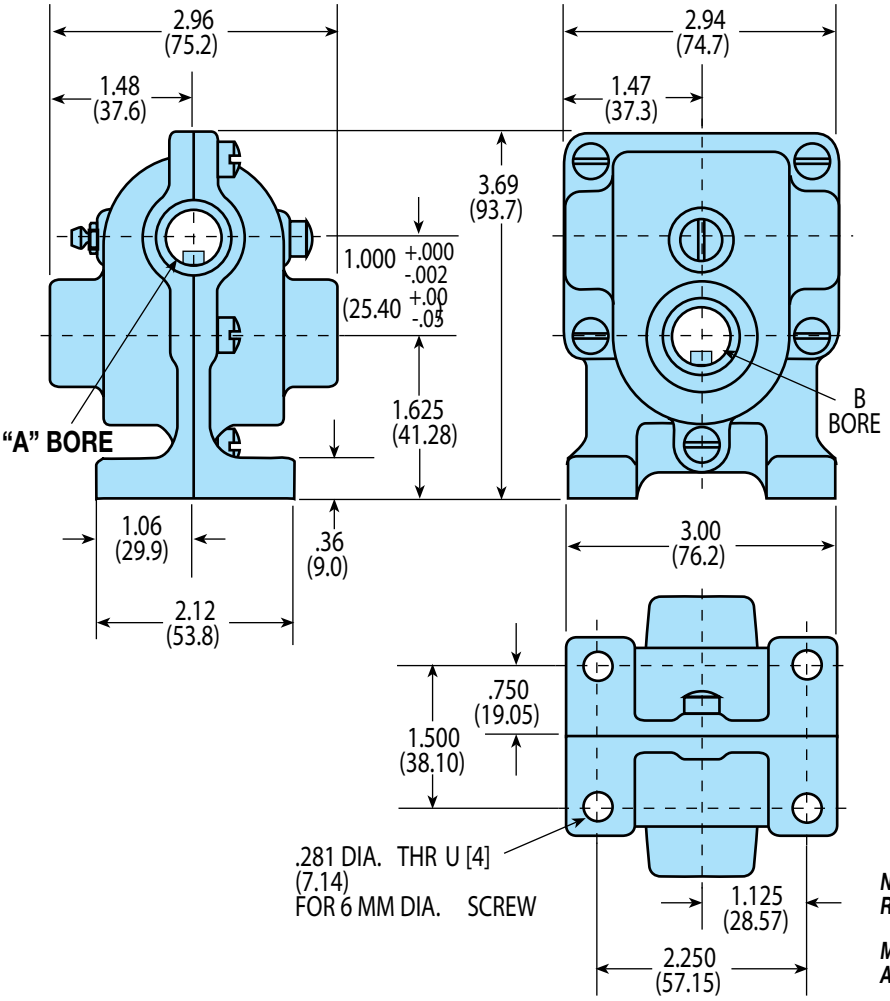

NOTE: KEYWAYS ARE SHOWN IN RANDOM POSITIONS.

METRIC MEASUREMENTS, IN MILLIMETERS, ARE IN PARENTHESES

Models and Bore Dimensions

U.S. - COMPACT FOOT MOUNT - 1:1

LOW TORQUE JOURNAL BEARING & HIGH TORQUE ROLLER BEARING

LOW TORQUE JOURNAL MODEL NO.	HIGH TORQUE ROLLER MODEL NO.	RH OR LH	"A" BORE		"B" BORE	
			BORE SIZE (IN.)	WxD KEYWAY (IN.)	BORE SIZE (IN.)	WxD KEYWAY (IN.)
0112-0000	0111-0100	RH	1/2	1/8 x 1/16	1/2	1/8 x 1/16
0111-0000	0112-0100	LH	1/2	1/8 x 1/16	1/2	1/8 x 1/16
0114-0000	0113-0100	RH	1/2	1/8 x 1/16	5/8	1/8 x 1/16
0113-0000	0114-0100	LH	1/2	1/8 x 1/16	5/8	1/8 x 1/16
0116-0000	0115-0100	RH	5/8	1/8 x 1/16	5/8	1/8 x 1/16
0115-0000	0116-0100	LH	5/8	1/8 x 1/16	5/8	1/8 x 1/16

METRIC - COMPACT FOOT MOUNT - 1:1

HIGH TORQUE ROLLER BEARING

HIGH TORQUE ROLLER MODEL NO.	RH OR LH	"A" BORE		"B" BORE	
		BORE SIZE (MM)	WXD KEYWAY (MM)	BORE SIZE (MM)	WXD KEYWAY (MM)
0126-0100	RH	12	4 x 2	12	4 x 2
0127-0100	LH	12	4 x 2	12	4 x 2
0128-0100	RH	12	4 x 2	15	5 x 2.5
0129-0100	LH	12	4 x 2	15	5 x 2.5
0130-0100	RH	15	5 x 2.5	15	5 x 2.5
0131-0100	LH	15	5 x 2.5	15	5 x 2.5

NOTE: METRIC SIZES AVAILABLE ONLY IN HIGH TORQUE ROLLER BEARING MODELS.

Float-A-Shaft Gearbox ORDER ONLINE

STANDARD SERIES - 1:1 RATIO - US & METRIC

AVAILABLE STYLES

Low Torque Journal Bearings

Standard

5 lbs. (2.27 kgs.)



Flat Base

5-3/4 lbs. (2.61 kgs.)



AVAILABLE STYLES

High Torque Roller Bearings

Standard

5-1/2 lbs. (2.49 kgs.)



Flat Base

6-1/2 lbs. (2.95 kgs.)



PERFORMANCE DATA

Low Torque Journal Bearings

Torque and Efficiency vs RPM at Maximum Bearing Temperature

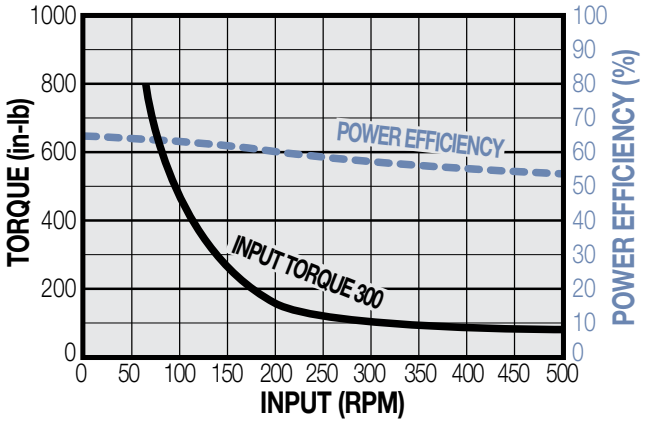

PERFORMANCE DATA

High Torque Roller Bearings

Torque and Efficiency vs RPM at Maximum Bearing Temperature

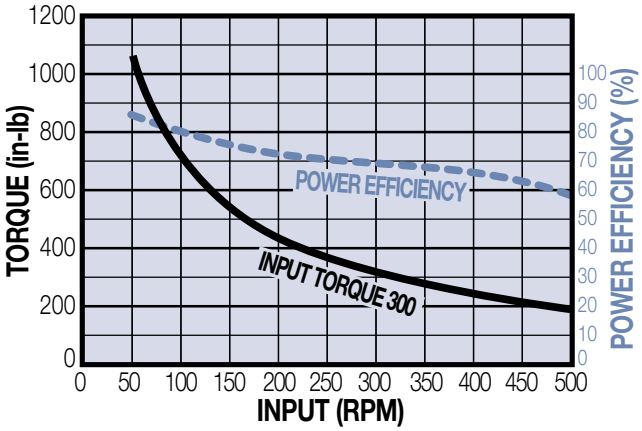

Float-A-Shaft Gearbox

ORDER ONLINE

STANDARD SERIES - 1:1 RATIO - US & METRIC

DIMENSIONS: STANDARD HIGH TORQUE & LOW TORQUE BEARINGS

Model Builder 3D CAD Available at: www.tolomatic.com

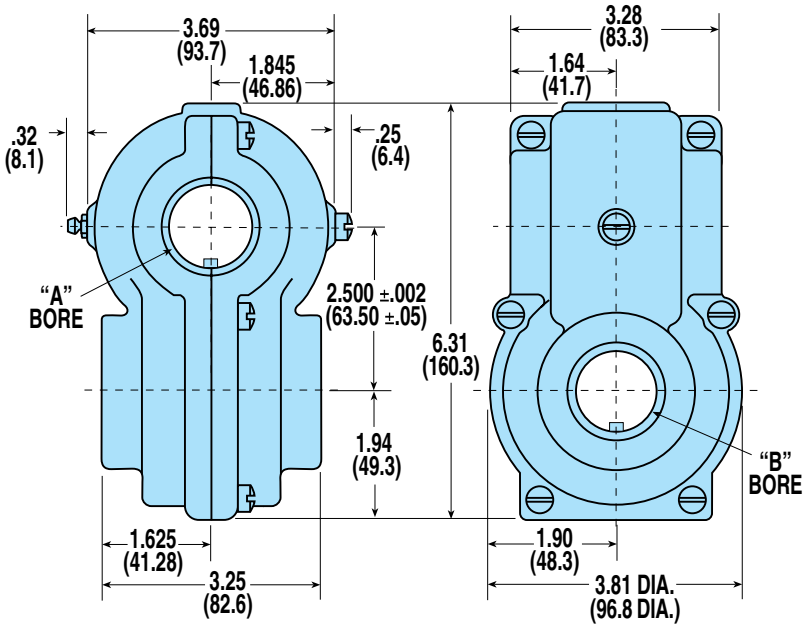

NOTE: KEYWAYS ARE SHOWN IN RANDOM POSITIONS.

METRIC MEASUREMENTS, IN MILLIMETERS, ARE IN PARENTHESES

Models and Bore Dimensions

U.S. - STANDARD - 1:1

LOW TORQUE JOURNAL BEARING & HIGH TORQUE ROLLER BEARING

LOW TORQUE JOURNAL MODEL NO.	HIGH TORQUE ROLLER MODEL NO.	RH OR LH	"A" BORE		"B" BORE	
			BORE SIZE (IN.)	WxD KEYWAY (IN.)	BORE SIZE (IN.)	WxD KEYWAY (IN.)
0204-0000	0203-0200	RH	3/4	3/16 x 3/32	3/4	3/16 x 3/32
0203-0000	0204-0200	LH	3/4	3/16 x 3/32	3/4	3/16 x 3/32
0208-0000	0205-0200	RH	3/4	3/16 x 3/32	1	1/4 x 1/8
0207-0000	0206-0200	LH	3/4	3/16 x 3/32	1	1/4 x 1/8
0212-0000	0207-0200	RH	3/4	3/16 x 3/32	1-1/4	1/4 x 1/8
0211-0000	0208-0200	LH	3/4	3/16 x 3/32	1-1/4	1/4 x 1/8
0216-0000	NA	RH	3/4	3/16 x 3/32	1-1/2	3/8 x 3/16
0215-0000	NA	LH	3/4	3/16 x 3/32	1-1/2	3/8 x 3/16
0220-0000	0209-0200	RH	1	1/4 x 1/8	1	1/4 x 1/8
0219-0000	0210-0200	LH	1	1/4 x 1/8	1	1/4 x 1/8
0224-0000	0211-0200	RH	1	1/4 x 1/8	1-1/4	1/4 x 1/8
0223-0000	0212-0200	LH	1	1/4 x 1/8	1-1/4	1/4 x 1/8
0228-0000	NA	RH	1	1/4 x 1/8	1-1/2	3/8 x 3/16
0227-0000	NA	LH	1	1/4 x 1/8	1-1/2	3/8 x 3/16
0232-0000	0213-0200	RH	1-1/4	1/4 x 1/8	1-1/4	1/4 x 1/8
0231-0000	0214-0200	LH	1-1/4	1/4 x 1/8	1-1/4	1/4 x 1/8
0236-0000	NA	RH	1-1/4	1/4 x 1/8	1-1/2	3/8 x 3/16
0235-0000	NA	LH	1-1/4	1/4 x 1/8	1-1/2	3/8 x 3/16
0240-0000	NA	RH	1-1/2	3/8 x 3/16	1-1/2	3/8 x 3/16
0239-0000	NA	LH	1-1/2	3/8 x 3/16	1-1/2	3/8 x 3/16

METRIC - STANDARD - 1:1

HIGH TORQUE ROLLER BEARING

HIGH TORQUE ROLLER MODEL NO.	RH OR LH	"A" BORE		"B" BORE	
		BORE SIZE (MM)	WxD KEYWAY (MM)	BORE SIZE (MM)	WxD KEYWAY (MM)
0308-0200	RH	20	6 x 3	20	6 x 3
0309-0200	LH	20	6 x 3	20	6 x 3
0310-0200	RH	20	6 x 3	25	8 x 3.5
0311-0200	LH	20	6 x 3	25	8 x 3.5
0312-0200	RH	20	6 x 3	30	8 x 3.5
0313-0200	LH	20	6 x 3	30	8 x 3.5
0314-0200	RH	25	8 x 3.5	25	8 x 3.5
0315-0200	LH	25	8 x 3.5	25	8 x 3.5
0316-0200	RH	25	8 x 3.5	30	8 x 3.5
0317-0200	LH	25	8 x 3.5	30	8 x 3.5
0318-0200	RH	30	8 x 3.5	30	8 x 3.5
0319-0200	LH	30	8 x 3.5	30	8 x 3.5

NOTE: METRIC SIZES AVAILABLE ONLY IN HIGH TORQUE ROLLER BEARING MODELS.

DIMENSIONS: STANDARD FLAT BASE HIGH TORQUE & LOW TORQUE BEARINGS

Model Builder 3D CAD Available at: www.tolomatic.com

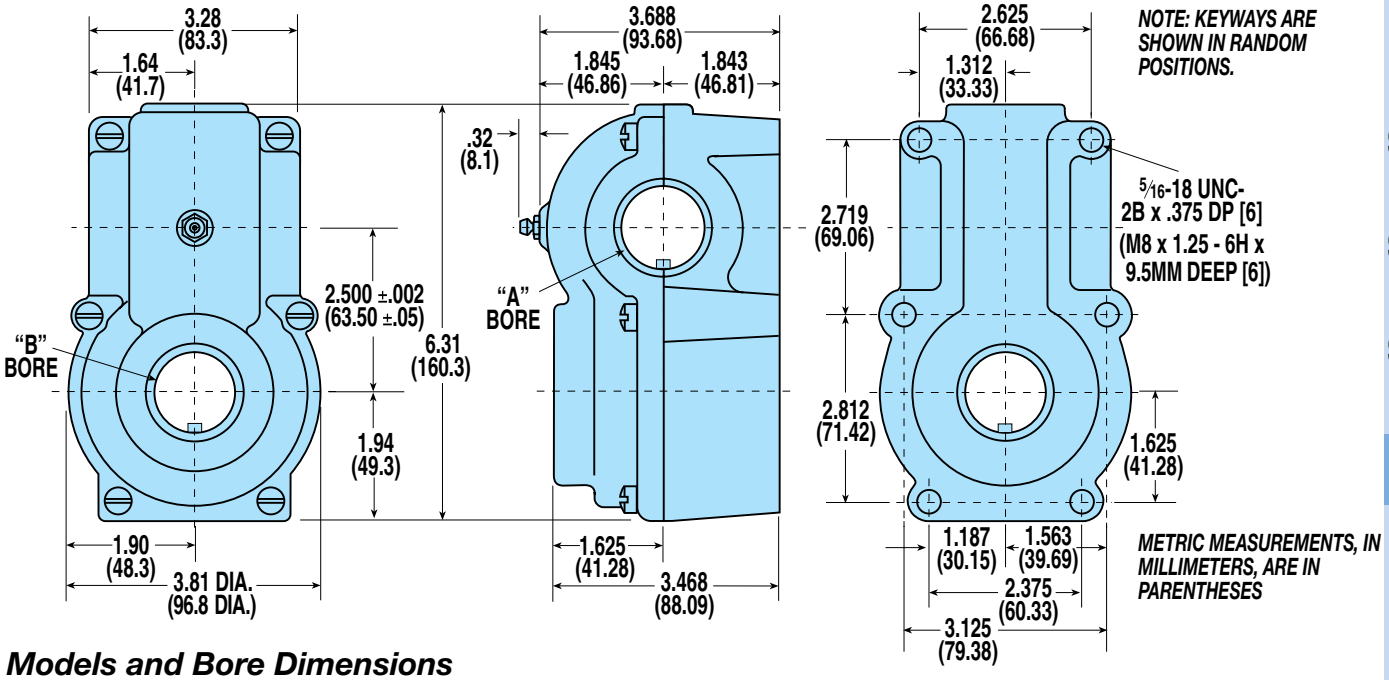

Models and Bore Dimensions

U.S. - STANDARD FLAT BASE - 1:1

LOW TORQUE JOURNAL BEARING & HIGH TORQUE ROLLER BEARING

LOW TORQUE JOURNAL MODEL NO.	HIGH TORQUE ROLLER MODEL NO.	RH OR LH	"A" BORE		"B" BORE	
			BORE SIZE (IN.)	WxD KEYWAY (IN.)	BORE SIZE (IN.)	WxD KEYWAY (IN.)
0245-0000	0217-0200	RH	3/4	3/16 x 3/32	3/4	3/16 x 3/32
0246-0000	0218-0200	LH	3/4	3/16 x 3/32	3/4	3/16 x 3/32
0247-0000	0219-0200	RH	3/4	3/16 x 3/32	1	1/4 x 1/8
0248-0000	0220-0200	LH	3/4	3/16 x 3/32	1	1/4 x 1/8
0249-0000	0221-0200	RH	3/4	3/16 x 3/32	1-1/4	1/4 x 1/8
0250-0000	0222-0200	LH	3/4	3/16 x 3/32	1-1/4	1/4 x 1/8
0251-0000	NA	RH	3/4	3/16 x 3/32	1-1/2	3/8 x 3/16
0252-0000	NA	LH	3/4	3/16 x 3/32	1-1/2	3/8 x 3/16
0253-0000	0223-0200	RH	1	1/4 x 1/8	1	1/4 x 1/8
0254-0000	0224-0200	LH	1	1/4 x 1/8	1	1/4 x 1/8
0255-0000	0225-0200	RH	1	1/4 x 1/8	1-1/4	1/4 x 1/8
0256-0000	0226-0200	LH	1	1/4 x 1/8	1-1/4	1/4 x 1/8
0257-0000	NA	RH	1	1/4 x 1/8	1-1/2	3/8 x 3/16
0258-0000	NA	LH	1	1/4 x 1/8	1-1/2	3/8 x 3/16
0269-0000	0227-0200	RH	1-1/4	1/4 x 1/8	1-1/4	1/4 x 1/8
0270-0000	0228-0200	LH	1-1/4	1/4 x 1/8	1-1/4	1/4 x 1/8
0271-0000	NA	RH	1-1/4	1/4 x 1/8	1-1/2	3/8 x 3/16
0272-0000	NA	LH	1-1/4	1/4 x 1/8	1-1/2	3/8 x 3/16
0273-0000	NA	RH	1-1/2	3/8 x 3/16	1-1/2	3/8 x 3/16
0274-0000	NA	LH	1-1/2	3/8 x 3/16	1-1/2	3/8 x 3/16

METRIC - STANDARD FLAT BASE - 1:1

HIGH TORQUE ROLLER BEARING

HIGH TORQUE ROLLER MODEL NO.	RH OR LH	"A" BORE		"B" BORE	
		BORE SIZE (MM)	WxD KEYWAY (MM)	BORE SIZE (MM)	WxD KEYWAY (MM)
0328-0200	RH	20	6 x 3	20	6 x 3
0329-0200	LH	20	6 x 3	20	6 x 3
0330-0200	RH	20	6 x 3	25	8 x 3.5
0331-0200	LH	20	6 x 3	25	8 x 3.5
0332-0200	RH	20	6 x 3	30	8 x 3.5
0333-0200	LH	20	6 x 3	30	8 x 3.5
0334-0200	RH	25	8 x 3.5	25	8 x 3.5
0335-0200	LH	25	8 x 3.5	25	8 x 3.5
0336-0200	RH	25	8 x 3.5	30	8 x 3.5
0337-0200	LH	25	8 x 3.5	30	8 x 3.5
0338-0200	RH	30	8 x 3.5	30	8 x 3.5
0339-0200	LH	30	8 x 3.5	30	8 x 3.5

NOTE: METRIC SIZES AVAILABLE ONLY IN HIGH TORQUE ROLLER BEARING MODELS.

Float-A-Shaft Gearbox

ORDER ONLINE

STANDARD SERIES - 3:2 RATIO - US & METRIC

AVAILABLE STYLES

Low Torque Journal Bearings

Standard

5-3/4 lbs. (2.61 kgs.)



Flat Base

5-3/4 lbs. (2.61 kgs.)



AVAILABLE STYLES

High Torque Roller Bearings

Standard

6 lbs. (2.72 kgs.)



Flat Base

6-3/4 lbs. (3.06 kgs.)



PERFORMANCE DATA

Low Torque Journal Bearings

Torque and Efficiency vs RPM at Maximum Bearing Temperature

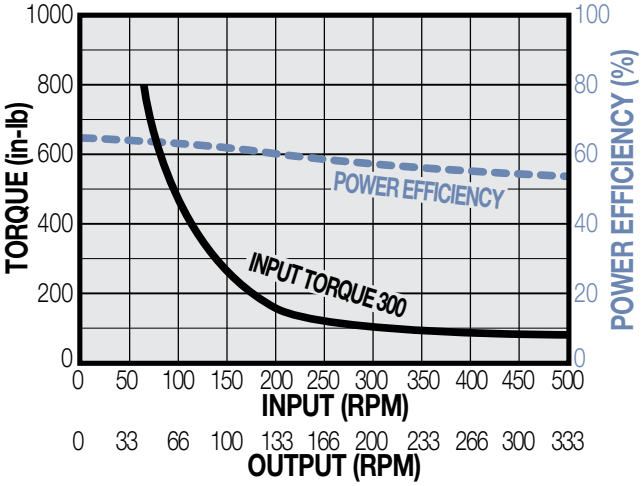

PERFORMANCE DATA

High Torque Roller Bearings

Torque and Efficiency vs RPM at Maximum Bearing Temperature

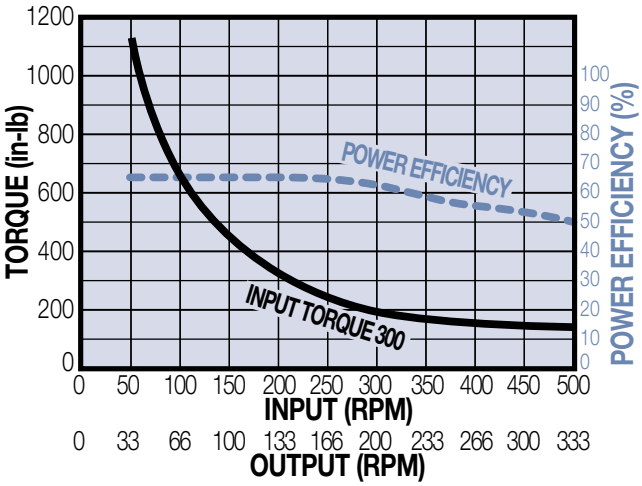

DIMENSIONS: STANDARD HIGH TORQUE & LOW TORQUE BEARINGS

Model Builder 3D CAD Available at: www.tolomatic.com

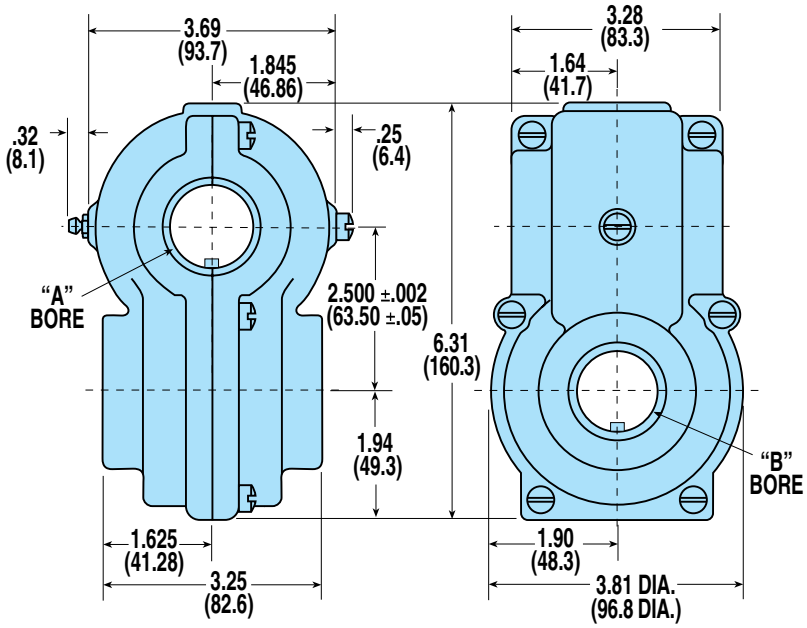

NOTE: KEYWAYS ARE SHOWN IN RANDOM POSITIONS.

METRIC MEASUREMENTS, IN MILLIMETERS, ARE IN PARENTHESES

Models and Bore Dimensions

U.S. - STANDARD - 3:2

LOW TORQUE JOURNAL BEARING & HIGH TORQUE ROLLER BEARING

LOW TORQUE JOURNAL MODEL NO.	HIGH TORQUE ROLLER MODEL NO.	RH OR LH	"A" BORE		"B" BORE	
			BORE SIZE (IN.)	WXD KEYWAY (IN.)	BORE SIZE (IN.)	WXD KEYWAY (IN.)
0241-0000	0231-0200	RH	3/4	3/16 x 3/32	3/4	3/16 x 3/32
0242-0000	0232-0200	LH	3/4	3/16 x 3/32	3/4	3/16 x 3/32
0259-0000	0233-0200	RH	3/4	3/16 x 3/32	1	1/4 x 1/8
0260-0000	0234-0200	LH	3/4	3/16 x 3/32	1	1/4 x 1/8
NA	0235-0200	RH	3/4	3/16 x 3/32	1-1/4	1/4 x 1/8
NA	0236-0200	LH	3/4	3/16 x 3/32	1-1/4	1/4 x 1/8
0261-0000	0237-0200	RH	1	1/4 x 1/8	1	1/4 x 1/8
0262-0000	0238-0200	LH	1	1/4 x 1/8	1	1/4 x 1/8
0263-0000	0239-0200	RH	1	1/4 x 1/8	1-1/4	1/4 x 1/8
0264-0000	0240-0200	LH	1	1/4 x 1/8	1-1/4	1/4 x 1/8
0265-0000	0241-0200	RH	1-1/4	1/4 x 1/8	1-1/4	1/4 x 1/8
0266-0000	0242-0200	LH	1-1/4	1/4 x 1/8	1-1/4	1/4 x 1/8

METRIC - STANDARD - 3:2

HIGH TORQUE ROLLER BEARING

HIGH TORQUE ROLLER MODEL NO.	RH OR LH	"A" BORE		"B" BORE	
		BORE SIZE (MM)	WxD KEYWAY (MM)	BORE SIZE (MM)	WxD KEYWAY (MM)
0354-0200	RH	25	8 x 3.5	25	8 x 3.5
0355-0200	LH	25	8 x 3.5	25	8 x 3.5
0356-0200	RH	25	8 x 3.5	30	8 x 3.5
0357-0200	LH	25	8 x 3.5	30	8 x 3.5
0358-0200	RH	30	8 x 3.5	30	8 x 3.5
0359-0200	LH	30	8 x 3.5	30	8 x 3.5

NOTE: METRIC SIZES AVAILABLE ONLY IN HIGH TORQUE ROLLER BEARING MODELS.

NOTE: FOR LOW TORQUE JOURNAL BEARING MODELS
THE "A" BORE CONTAINS THE 20 TOOTH GEAR. THE "B" BORE CONTAINS THE 30 TOOTH GEAR.

NOTE: FOR HIGH TORQUE ROLLER BEARING MODELS
THE "A" BORE CONTAINS THE 20 TOOTH GEAR. THE "B" BORE CONTAINS THE 30 TOOTH GEAR.

Float-A-Shaft Gearbox

ORDER ONLINE

STANDARD SERIES - 3:2 RATIO - US & METRIC

DIMENSIONS: STANDARD FLAT BASE HIGH TORQUE & LOW TORQUE BEARINGS

Model Builder 3D CAD Available at: www.tolomatic.com

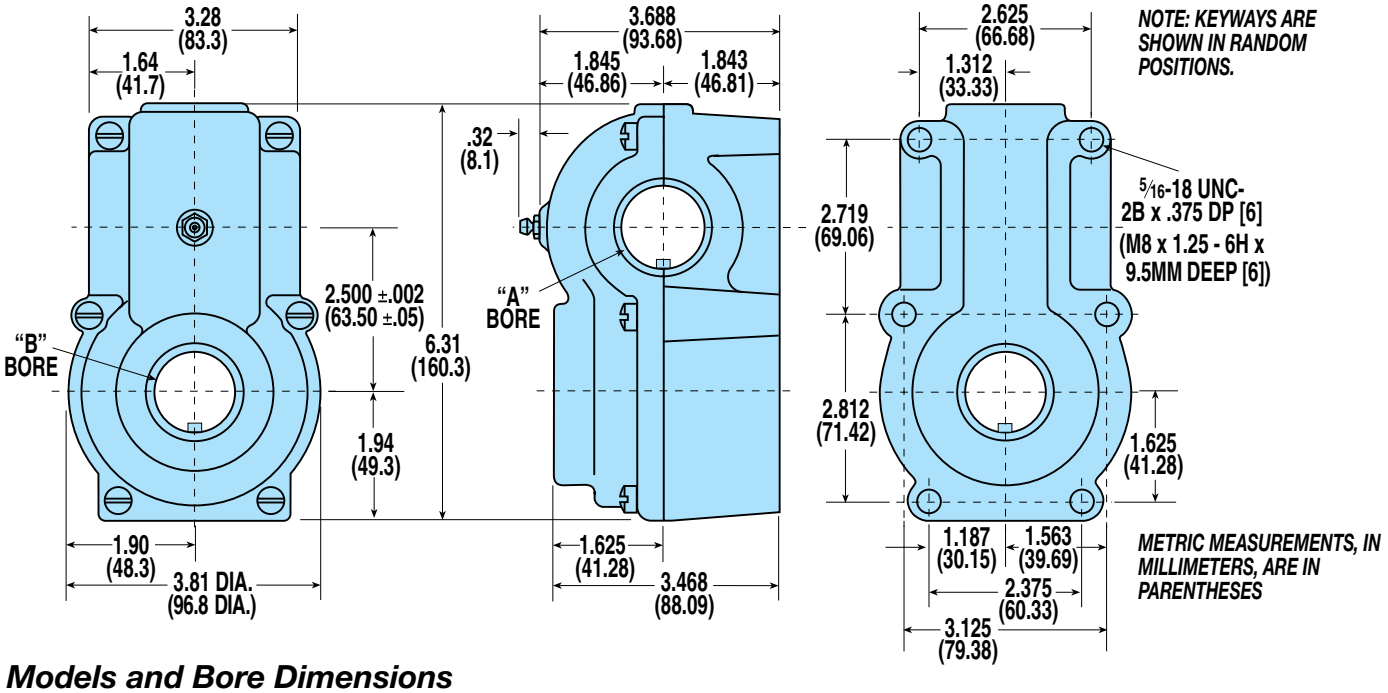

Models and Bore Dimensions

U.S. - STANDARD FLAT BASE - 3:2

LOW TORQUE JOURNAL BEARING & HIGH TORQUE ROLLER BEARING

LOW TORQUE JOURNAL MODEL NO.	HIGH TORQUE ROLLER MODEL NO.	RH OR LH	"A" BORE		"B" BORE	
			BORE SIZE (IN.)	WXD KEYWAY (IN.)	BORE SIZE (IN.)	WXD KEYWAY (IN.)
0277-0000	0245-0200	RH	3/4	3/16 x 3/32	3/4	3/16 x 3/32
0278-0000	0246-0200	LH	3/4	3/16 x 3/32	3/4	3/16 x 3/32
0279-0000	0247-0200	RH	3/4	3/16 x 3/32	1	1/4 x 1/8
0280-0000	0248-0200	LH	3/4	3/16 x 3/32	1	1/4 x 1/8
NA	0249-0200	RH	3/4	3/16 x 3/32	1-1/4	1/4 x 1/8
NA	0250-0200	LH	3/4	3/16 x 3/32	1-1/4	1/4 x 1/8
0281-0000	0251-0200	RH	1	1/4 x 1/8	1	1/4 x 1/8
0282-0000	0252-0200	LH	1	1/4 x 1/8	1	1/4 x 1/8
0283-0000	0253-0200	RH	1	1/4 x 1/8	1-1/4	1/4 x 1/8
0284-0000	0254-0200	LH	1	1/4 x 1/8	1-1/4	1/4 x 1/8
0285-0000	0255-0200	RH	1-1/4	1/4 x 1/8	1-1/4	1/4 x 1/8
0286-0000	0256-0200	LH	1-1/4	1/4 x 1/8	1-1/4	1/4 x 1/8

METRIC - STANDARD FLAT BASE - 3:2

HIGH TORQUE ROLLER BEARING

HIGH TORQUE ROLLER MODEL NO.	RH OR LH	"A" BORE		"B" BORE	
		BORE SIZE (MM)	WXD KEYWAY (MM)	BORE SIZE (MM)	WXD KEYWAY (MM)
0374-0200	RH	25	8 x 3.5	25	8 x 3.5
0375-0200	LH	25	8 x 3.5	25	8 x 3.5
0376-0200	RH	25	8 x 3.5	30	8 x 3.5
0377-0200	LH	25	8 x 3.5	30	8 x 3.5
0378-0200	RH	30	8 x 3.5	30	8 x 3.5
0379-0200	LH	30	8 x 3.5	30	8 x 3.5

NOTE: FOR LOW TORQUE JOURNAL BEARING MODELS
THE "A" BORE CONTAINS THE 20 TOOTH GEAR. THE "B" BORE CONTAINS THE 30 TOOTH GEAR.

NOTE: FOR HIGH TORQUE ROLLER BEARING MODELS
THE "A" BORE CONTAINS THE 20 TOOTH GEAR. THE "B" BORE CONTAINS THE 30 TOOTH GEAR.

Float-A-Shaft Gearbox ORDER ONLINE

STANDARD SERIES - 2:1 RATIO - US & METRIC

AVAILABLE STYLES

Low Torque Journal Bearings

Standard

3-1/2 lbs. (1.59 kgs.)



AVAILABLE STYLES

High Torque Roller Bearings

Standard

6-1/4 lbs. (2.84 kgs.)



Flat Base

6-3/4 lbs. (3.06 kgs.)



PERFORMANCE DATA

Low Torque Journal Bearings

Torque and Efficiency vs RPM at Maximum Bearing Temperature

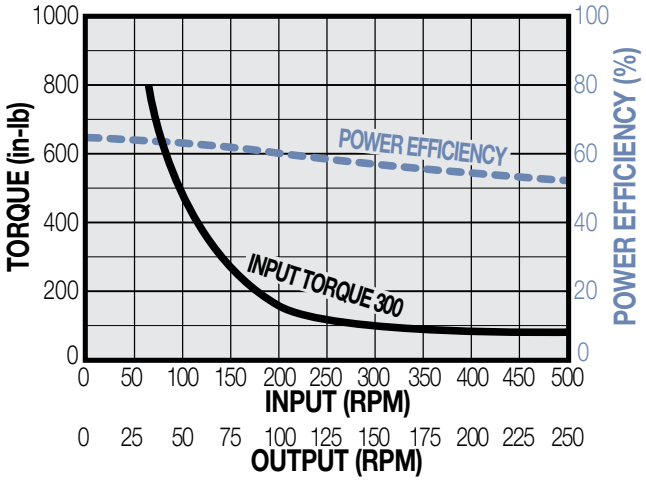

PERFORMANCE DATA

High Torque Roller Bearings

Torque and Efficiency vs RPM at Maximum Bearing Temperature

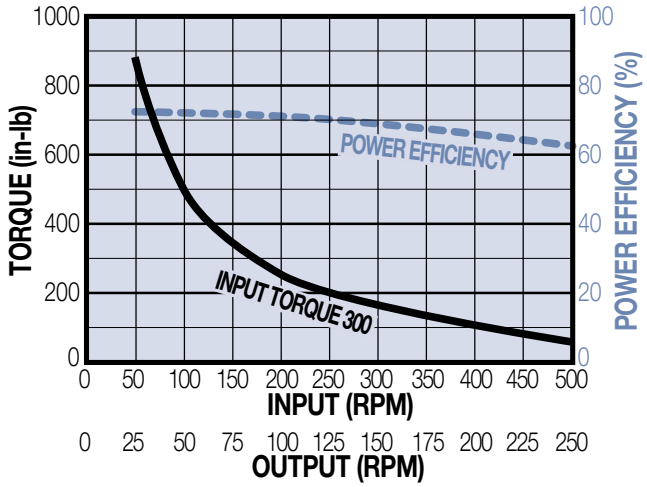

Float-A-Shaft Gearbox

ORDER ONLINE

STANDARD SERIES - 2:1 RATIO - US & METRIC

DIMENSIONS: STANDARD LOW TORQUE BEARINGS

Model Builder 3D CAD Available at: www.tolomatic.com

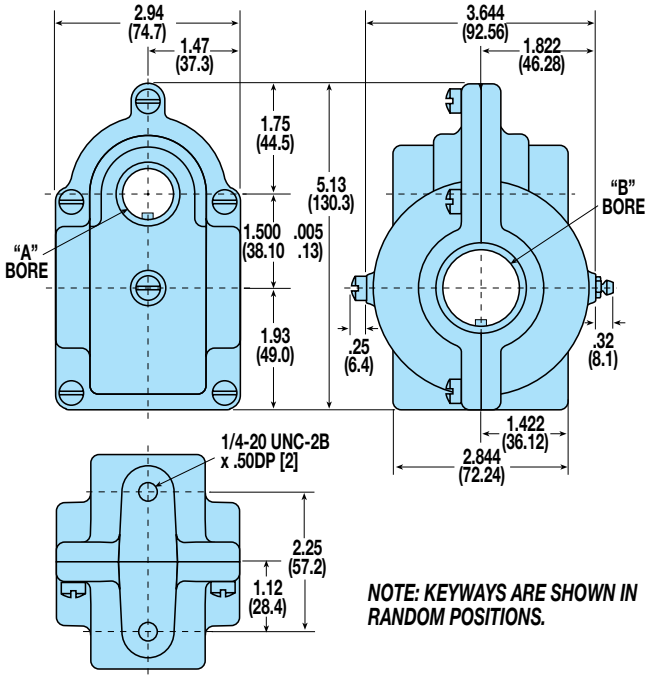

NOTE: KEYWAYS ARE SHOWN IN RANDOM POSITIONS.

DIMENSIONS: STANDARD HIGH TORQUE BEARINGS

Model Builder 3D CAD Available at: www.tolomatic.com

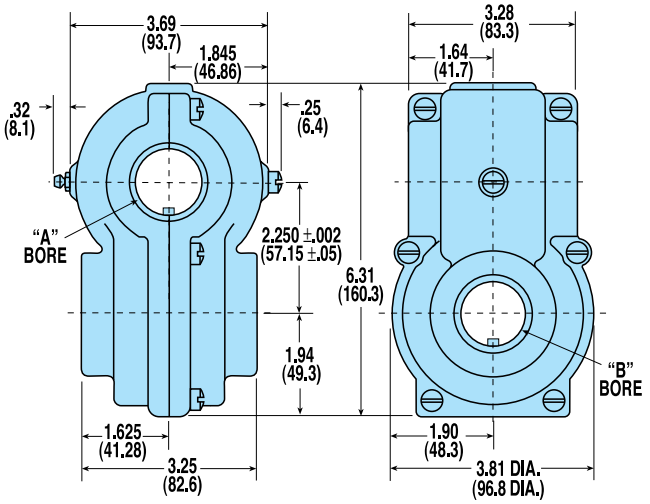

METRIC MEASUREMENTS, IN MILLIMETERS, ARE IN PARENTHESES

Models and Bore Dimensions

U.S. - STANDARD - 2:1

LOW TORQUE JOURNAL BEARING & HIGH TORQUE ROLLER BEARING

LOW TORQUE JOURNAL MODEL NO.	HIGH TORQUE ROLLER MODEL NO.	RH OR LH	"A" BORE		"B" BORE	
			BORE SIZE (IN.)	WXD KEYWAY (IN.)	BORE SIZE (IN.)	WXD KEYWAY (IN.)
0304-0000	0259-0200	RH	1/2	1/8 x 1/16	3/4	3/16 x 3/32
0303-0000	0260-0200	LH	1/2	1/8 x 1/16	3/4	3/16 x 3/32
0308-0000	0261-0200	RH	1/2	1/8 x 1/16	1	1/4 x 1/8
0307-0000	0262-0200	LH	1/2	1/8 x 1/16	1	1/4 x 1/8
0312-0000	0263-0200	RH	1/2	1/8 x 1/16	1-1/4	1/4 x 1/8
0311-0000	0264-0200	LH	1/2	1/8 x 1/16	1-1/4	1/4 x 1/8
0318-0000	0265-0200	RH	5/8	1/8 x 1/16	3/4	3/16 x 3/32
0317-0000	0266-0200	LH	5/8	1/8 x 1/16	3/4	3/16 x 3/32
0322-0000	0267-0200	RH	5/8	1/8 x 1/16	1	1/4 x 1/8
0321-0000	0268-0200	LH	5/8	1/8 x 1/16	1	1/4 x 1/8
0326-0000	0269-0200	RH	5/8	1/8 x 1/16	1-1/4	1/4 x 1/8
0325-0000	0270-0200	LH	5/8	1/8 x 1/16	1-1/4	1/4 x 1/8
NA	0271-0200	RH	3/4	3/16 x 3/32	3/4	3/16 x 3/32
NA	0272-0200	LH	3/4	3/16 x 3/32	3/4	3/16 x 3/32
NA	0273-0200	RH	3/4	3/16 x 3/32	1	1/4 x 1/8
NA	0274-0200	LH	3/4	3/16 x 3/32	1	1/4 x 1/8
NA	0275-0200	RH	3/4	3/16 x 3/32	1-1/4	1/4 x 1/8
NA	0276-0200	LH	3/4	3/16 x 3/32	1-1/4	1/4 x 1/8

NOTE: FOR LOW TORQUE JOURNAL BEARING MODELS: THE "A" BORE CONTAINS THE 10 TOOTH GEAR. THE "B" BORE CONTAINS THE 20 TOOTH GEAR.

METRIC - STANDARD - 2:1

HIGH TORQUE ROLLER BEARING

HIGH TORQUE ROLLER MODEL NO.	RH OR LH	"A" BORE		"B" BORE	
		BORE SIZE (MM)	WXD KEYWAY (MM)	BORE SIZE (MM)	WXD KEYWAY (MM)
0390-0200	RH	15	5 x 2.5	20	6 x 3
0391-0200	LH	15	5 x 2.5	20	6 x 3
0392-0200	RH	15	5 x 2.5	25	8 x 3.5
0393-0200	LH	15	5 x 2.5	25	8 x 3.5
0394-0200	RH	15	5 x 2.5	30	8 x 3.5
0395-0200	LH	15	5 x 2.5	30	8 x 3.5

NOTE: METRIC SIZES AVAILABLE ONLY IN HIGH TORQUE ROLLER BEARING MODELS.

NOTE: FOR HIGH TORQUE ROLLER BEARING MODELS: THE "A" BORE CONTAINS THE 15 TOOTH GEAR. THE "B" BORE CONTAINS THE 30 TOOTH GEAR.

DIMENSIONS: STANDARD FLAT BASE HIGH TORQUE BEARINGS

Model Builder 3D CAD Available at: www.tolomatic.com

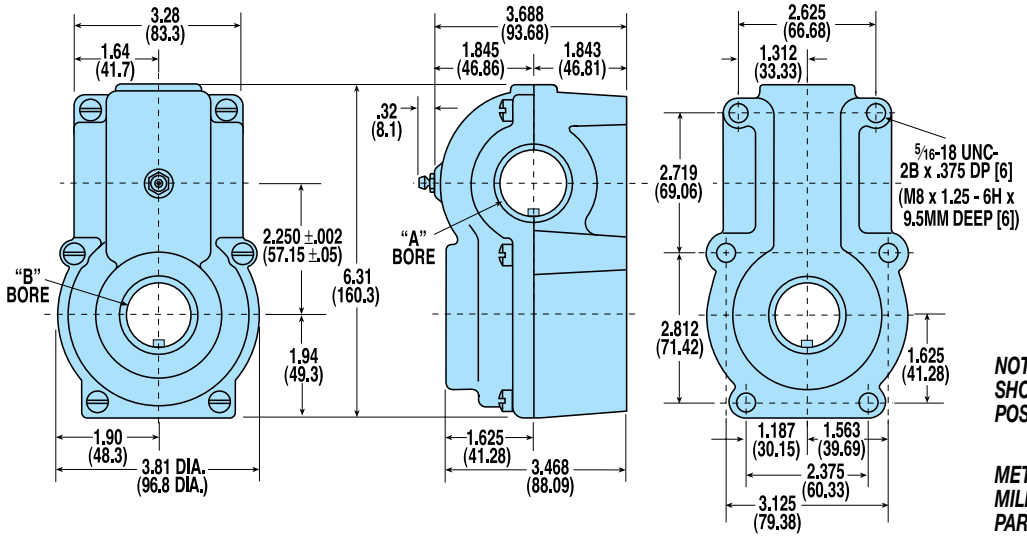

NOTE: KEYWAYS ARE SHOWN IN RANDOM POSITIONS.

METRIC MEASUREMENTS, IN MILLIMETERS, ARE IN PARENTHESES

Models and Bore Dimensions

U.S.- STANDARD FLAT BASE - 2:1
HIGH TORQUE ROLLER BEARING

HIGH TORQUE ROLLER MODEL NO.	RH OR LH	"A" BORE		"B" BORE	
		BORE SIZE (IN.)	WXD KEYWAY (IN.)	BORE SIZE (IN.)	WXD KEYWAY (IN.)
0279-0200	RH	1/2	1/8 x 1/16	3/4	3/16 x 3/32
0280-0200	LH	1/2	1/8 x 1/16	3/4	3/16 x 3/32
0281-0200	RH	1/2	1/8 x 1/16	1	1/4 x 1/8
0282-0200	LH	1/2	1/8 x 1/16	1	1/4 x 1/8
0283-0200	RH	1/2	1/8 x 1/16	1-1/4	1/4 x 1/8
0284-0200	LH	1/2	1/8 x 1/16	1-1/4	1/4 x 1/8
0285-0200	RH	5/8	1/8 x 1/16	3/4	3/16 x 3/32
0286-0200	LH	5/8	1/8 x 1/16	3/4	3/16 x 3/32
0287-0200	RH	5/8	1/8 x 1/16	1	1/4 x 1/8
0288-0200	LH	5/8	1/8 x 1/16	1	1/4 x 1/8
0289-0200	RH	5/8	1/8 x 1/16	1-1/4	1/4 x 1/8
0290-0200	LH	5/8	1/8 x 1/16	1-1/4	1/4 x 1/8
0291-0200	RH	3/4	3/16 x 3/32	3/4	3/16 x 3/32
0292-0200	LH	3/4	3/16 x 3/32	3/4	3/16 x 3/32
0293-0200	RH	3/4	3/16 x 3/32	1	1/4 x 1/8
0294-0200	LH	3/4	3/16 x 3/32	1	1/4 x 1/8
0295-0200	RH	3/4	3/16 x 3/32	1-1/4	1/4 x 1/8
0296-0200	LH	3/4	3/16 x 3/32	1-1/4	1/4 x 1/8

METRIC - STANDARD FLAT BASE - 2:1
HIGH TORQUE ROLLER BEARING

HIGH TORQUE ROLLER MODEL NO.	RH OR LH	"A" BORE		"B" BORE	
		BORE SIZE (MM)	WXD KEYWAY (MM)	BORE SIZE (MM)	WXD KEYWAY (MM)
0422-0200	RH	15	5 x 2.5	20	6 x 3
0423-0200	LH	15	5 x 2.5	20	6 x 3
0424-0200	RH	15	5 x 2.5	25	8 x 3.5
0425-0200	LH	15	5 x 2.5	25	8 x 3.5
0426-0200	RH	15	5 x 2.5	30	8 x 3.5
0427-0200	LH	15	5 x 2.5	30	8 x 3.5

NOTE: METRIC SIZES AVAILABLE ONLY IN HIGH TORQUE ROLLER BEARING MODELS.

NOTE: FOR HIGH TORQUE ROLLER BEARING MODELS THE "A" BORE CONTAINS THE 15 TOOTH GEAR. THE "B" BORE CONTAINS THE 30 TOOTH GEAR.

Float-A-Shaft Gearbox

ORDER ONLINE

STANDARD SERIES - 2½:1 RATIO - US

AVAILABLE STYLES

Low Torque Journal Bearings

Standard

3-1/2 lbs. (1.59 kgs.)



PERFORMANCE DATA

Low Torque Journal Bearings

Torque and Efficiency vs RPM at Maximum Bearing Temperature

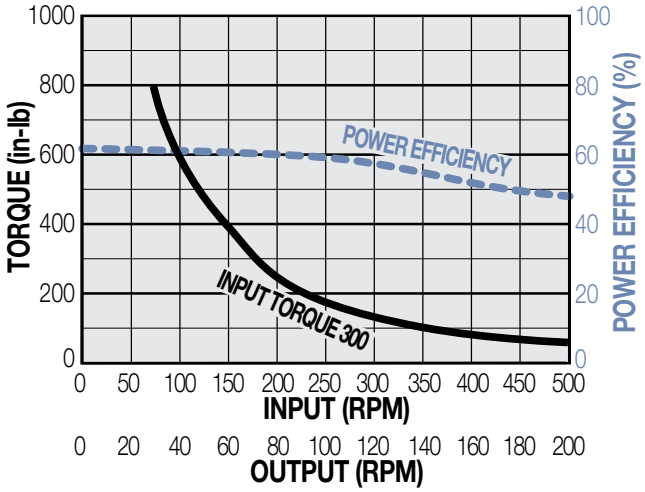

DIMENSIONS: STANDARD LOW TORQUE BEARINGS

Model Builder 3D CAD Available at: www.tolomatic.com

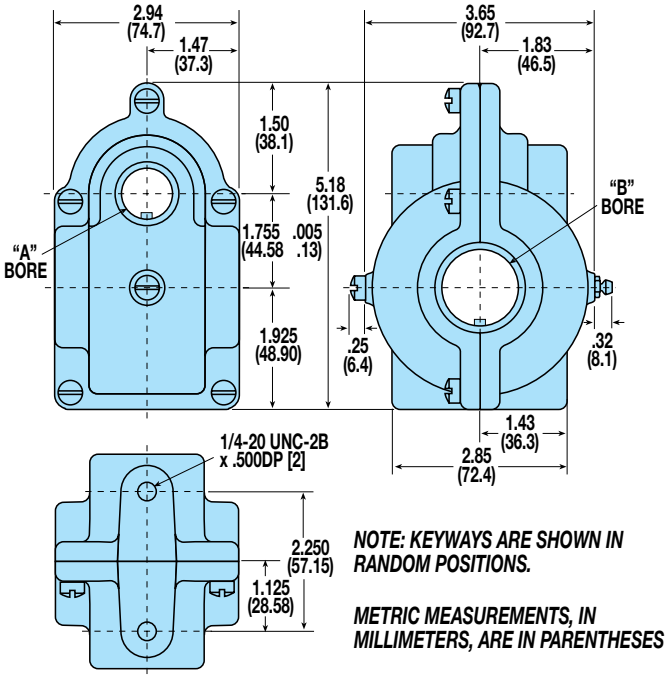

NOTE: KEYWAYS ARE SHOWN IN RANDOM POSITIONS.

METRIC MEASUREMENTS, IN MILLIMETERS, ARE IN PARENTHESES

Models and Bore Dimensions

U.S. - STANDARD - 2½:1
LOW TORQUE JOURNAL BEARING

LOW TORQUE JOURNAL MODEL NO.	RH OR LH	"A" BORE		"B" BORE	
		BORE SIZE (IN.)	WXD KEYWAY (IN.)	BORE SIZE (IN.)	WXD KEYWAY (IN.)
0403-0000	LH	1/2	1/8 x 1/16	3/4	3/16 x 3/32
0404-0000	RH	1/2	1/8 x 1/16	3/4	3/16 x 3/32
0407-0000	LH	1/2	1/8 x 1/16	1	1/4 x 1/8
0408-0000	RH	1/2	1/8 x 1/16	1	1/4 x 1/8
0411-0000	LH	1/2	1/8 x 1/16	1-1/4	1/4 x 1/8
0412-0000	RH	1/2	1/8 x 1/16	1-1/4	1/4 x 1/8
0417-0000	LH	5/8	1/8 x 1/16	3/4	3/16 x 3/32
0418-0000	RH	5/8	1/8 x 1/16	3/4	3/16 x 3/32
0421-0000	LH	5/8	1/8 x 1/16	1	1/4 x 1/8
0422-0000	RH	5/8	1/8 x 1/16	1	1/4 x 1/8
0425-0000	LH	5/8	1/8 x 1/16	1-1/4	1/4 x 1/8
0426-0000	RH	5/8	1/8 x 1/16	1-1/4	1/4 x 1/8

NOTE: THE "A" BORE CONTAINS THE 10 TOOTH GEAR. THE "B" BORE CONTAINS THE 25 TOOTH GEAR.

SELECTION

1.) DETERMINE INPUT TORQUE AND RPM REQUIRED

To select the Slide-Rite®, Slide-Rite®CR Gearbox, or Float-A-Shaft gearbox required for your application, you must determine the input torque and RPM required for your application. The maximum RPM rating for the Float-A-Shaft is 500 RPM, for the Slide-Rite® and the Slide-Rite®CR Gearbox it's 1200 RPM.

2.) NEED A GEAR RATIO OTHER THAN 1:1?

When utilizing the Float-A-Shaft ratioed units, the highest RPM shaft speed on either the input or the output shaft should not exceed 500 RPM. For the Slide-Rite ratioed units, the shaft speed (input or output) should not exceed 1200 RPM.

3.) REFER TO THE CATALOG PAGE FOR THE RATIO YOU HAVE SELECTED

Find your input torque in inch-pounds for the selected gearbox unit on the graph and intersect it with the RPM of the input shaft. In general, gearbox capacity increases as listed below:

1.) Float-A-Shaft: Compact: Low Torque Journal Bearings
2.) Float-A-Shaft: Compact: High Torque Roller Bearings
3.) Slide-Rite CR: Compact
4.) Float-A-Shaft: Standard: Low Torque Journal Bearings
5.) Slide-Rite: Compact
6.) Slide-Rite CR: Standard
7.) Float-A-Shaft: Standard: High Torque Roller Bearings
8.) Slide-Rite: Standard

For ratios other than 1:1 refer to the performance graph for that Float-A-Shaft gearbox. When torque vs RPM intersects below the 300°F curve, you have selected a gearbox suitable for your application.

If your torque vs RPM intersection point is above the 300°F curve, then you do not have a proper application for that gearbox. Your options are to reduce either your input torque or RPM to get under the 300°F curve or try a gearbox with greater capacity.

4.) SELECT PROPER BORE SIZE

After gearbox series selection, choose the bore size that suits your shaft requirements. (NOTE: Float-A-Shaft high torque roller bearing models and Slide-Rite 1:1 ratio models are available in metric sizes also.)

5.) DETERMINE YOUR OUTPUT TORQUE

SLIDE-RITE™&SLIDE-RITE™CR SELECTION EXAMPLE

Example: Slide-Rite® Gearbox Standard Series at 700 RPM and 90 inch-pounds of input torque (Refer to the graph shown below. From page 5)

Output torque = (Input torque) (efficiency) (ratio)
Output torque = (90 in.-lbs.) (.88) (1:1)
Output torque = 79 in.-lbs.

PERFORMANCE DATA

High Torque Ball Bearings

Torque and Efficiency vs RPM at Maximum Bearing Temperature

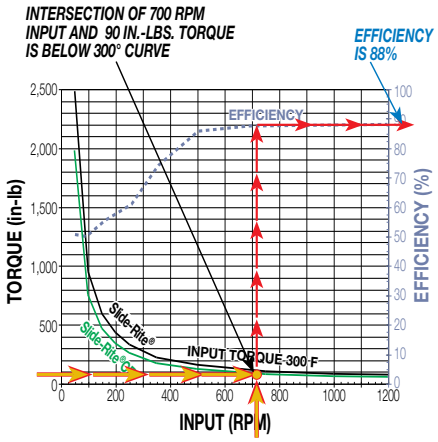

FLOAT-A-SHAFT SELECTION EXAMPLE

Multiply the input torque by the gearbox's efficiency times the gear ratio. See examples:

Example: 3:2 Ratio Journal Bearing Float-A-Shaft at 50 RPM and 500 inch-pounds of input torque (See graph below. From page 16)

Output torque = (Input torque) (efficiency) (ratio)
Output torque = (500 in.-lbs.) (.62) (3:2)
Output torque = 465 in.-lbs.

STANDARD SERIES 3:2 RATIO

PERFORMANCE DATA

Low Torque Journal Bearings

Torque and Efficiency vs RPM at Maximum Bearing Temperature

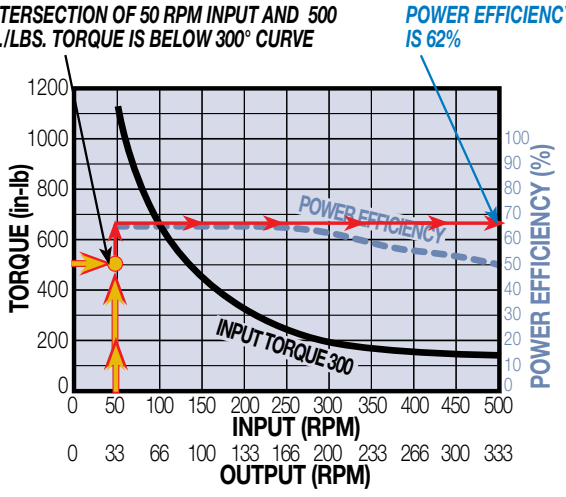

Gearbox

INSTALLATION

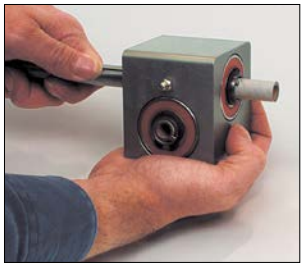

A plastic or cardboard dowel is inserted through the shaft bores during assembly and shipped in place. It allows you to install the Slide-Rite®, Slide-Rite®CR Gearbox, or Float-A-Shaft gearbox on your shafts in less than a minute.

To install your gearbox, simply line up the keyway on your shaft with the key and bore of the gearbox. Push the shaft through into place! The dowel falls out the other side and can be thrown away.

Gearboxes need not be disassembled and reassembled during installation. The dowel holds the gears in perfect alignment during installation and protects the precision internal parts from contamination and damage during shipping.

This fast and easy method of installation can be used whenever the keyways on your shafts extend out to the end of the shafts. For shafts with shorter keyways, the Float-A-Shaft can be built around the shaft. (Slide-Rite® and Slide-Rite®CR gearboxes cannot be disassembled.)

Rotation of left hand and right hand drive compared, *Slide-Rite® gearbox shown*

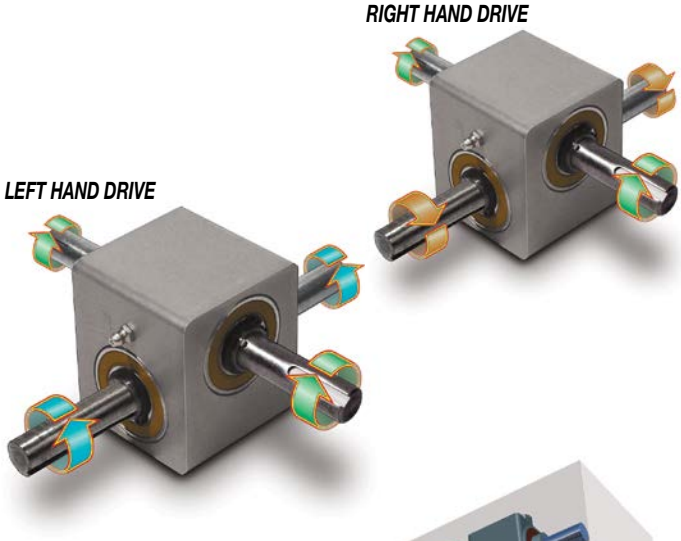

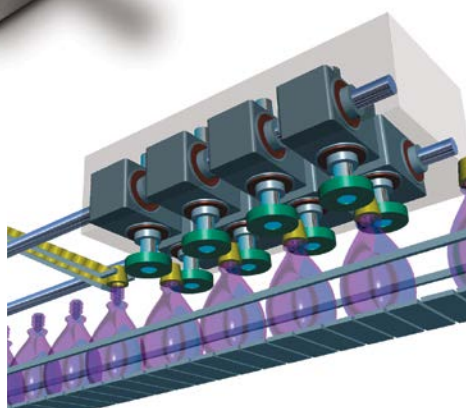

This bottle capping application utilizes both left hand and right hand gearboxes

SHAFT & KEYWAY REQUIREMENTS

Shaft Diameter
Tolerance of plus 0.000 in. to minus 0.002 in. is recommended and should have runout within 0.002 in. TIR.

Shaft Material
Use only alloy steel or stainless-steel for shafting, having a minimum hardness of RC40, or transmission shafting grade like 4140 or equivalent.

Shaft Finish
In stationary applications the shaft finish should be 64 RMS or better. Shaft finish for traversing applications should be 32 RMS.

Shaft Straightness
Shaft should be straight within 0.0015 in. TIR. per foot.

Keyway
Keyway should be made up to 0.001 oversize than the nominal. See dimension table for nominal keyway sizes. Sharp edges of keyway should be avoided.

Shaft Support
The shafts should be supported rigidly with either bearing blocks or pillow blocks to avoid excessive deflection. Gearbox bearings are designed to support the internal thrust and radial loads generated by the gear teeth. Shaft support should be located as close to the gearbox body as the application will allow. Supports greater than 25" from gearbox body (20" for compact models) can reduce gearbox efficiency and, ultimately, its life.

Lubrication, all gearboxes
An extreme-pressure synthetic lubricant which exhibits excellent anti-wear and rust protection qualities such as Mobilith® SHC 460 [14 oz. cartridge #0100-1605] or equivalent is recommended.

Temperature range	0 - 300°F
NLGI Number	1.5 - 2
Dropping Point (ASTM D566)	490+
Penetration Worked (ASTM D217)	300

Slide-Rite® Gearbox is a registered trademark of Tolomatic, Inc.

Mobilith® SHC 460 is a registered trademark of Exxon Mobil Corporation, www.mobil.com

Lubrication, Slide-Rite® gearboxes
The Slide-Rite® Gearbox is lubricated at the factory and is ready for installation. ***For most applications the unit is greased for life.*** (See the Slide-Rite Gearbox service sheet [#0100-4002 at tolomatic.com] for lubrication guidelines.)



CALIPER DISC BRAKES

Pneumatic Brakes
Pages 32 through 37

Hydraulic Brakes
Pages 38 through 49

Hydraulic/Mechanical Brakes
Pages 50 through 51

Mechanical Brakes
Pages 52 through 61

Spring Applied Brakes
Pages 62 through 75

Discs, Hubs and Bushings
Pages 76 through 83

Visit www.tolomatic.com for the latest updates and ordering.

Caliper Disc Brakes ORDER ONLINE

FEATURES

PNEUMATIC BRAKES

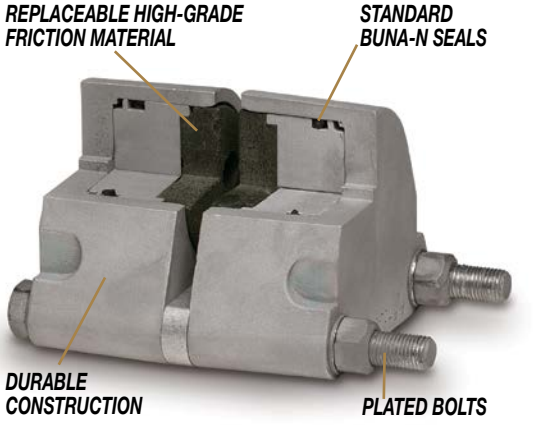

Tolomatic manufactures pneumatic brakes in three sizes: P10 Series, P20 Series and P220 Series. Available in both double acting or single acting. These brakes feature replaceable, high-grade friction material, standard Buna-N seals, aluminum construction and zinc plated bolts. Options include EPR seals,Viton® seals, retractable pistons and floating bracket. (See pages 32 to 37)

HYDRAULIC BRAKES

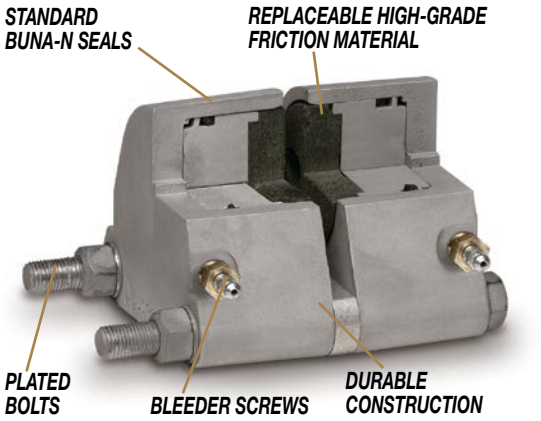

Tolomatic hydraulic caliper disc brakes are available in the widest range of sizes. From the H10 Series up to the H960 Series, these brakes are sure to supply the braking torque you need for your application. Available in both double acting or single acting (depending on model). These brakes feature replaceable, high-grade friction material, standard Buna-N seals, aluminum or cast iron construction (depending on model), bleeder screws and zinc plated bolts. Options include EPR seals,Viton® seals, retractable pistons and floating brackets. (See pages 38 to 49)

HYDRAULIC / MECHANICAL BRAKES

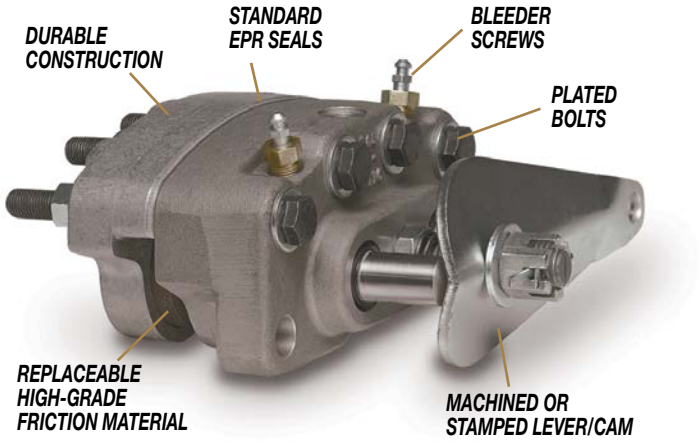

These Tolomatic brakes combine hydraulic and mechanical braking in one caliper. Available in the H/ME220 Series these single acting calipers deliver high braking torque in a small package. Features include: replaceable, high-grade friction material, standard EPR seals, aluminum or cast iron construction (depending on model), bleeder screws and zinc plated bolts. Options include Buna-N seals,Viton® seals and floating brackets. (See pages 50 to 51)

FEATURES

MECHANICAL BRAKES

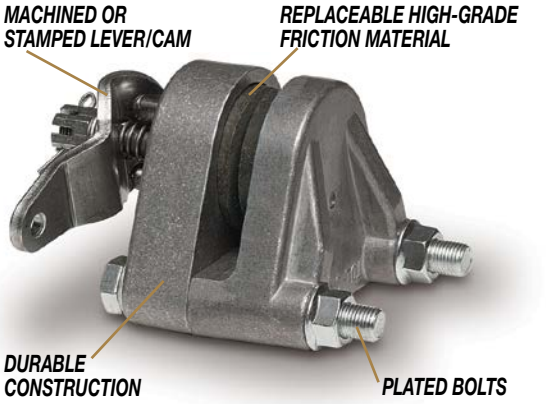

Tolomatic manufactures a broad range of mechanical brakes in these series: ME10, ME20, ME220 and MB3. Designed for use in areas that do not have access to other types of power, these single acting calipers feature replaceable, high-grade friction material, aluminum or cast iron construction (depending on model) and zinc plated bolts. (See pages 52 to 61)

SPRING APPLIED BRAKES

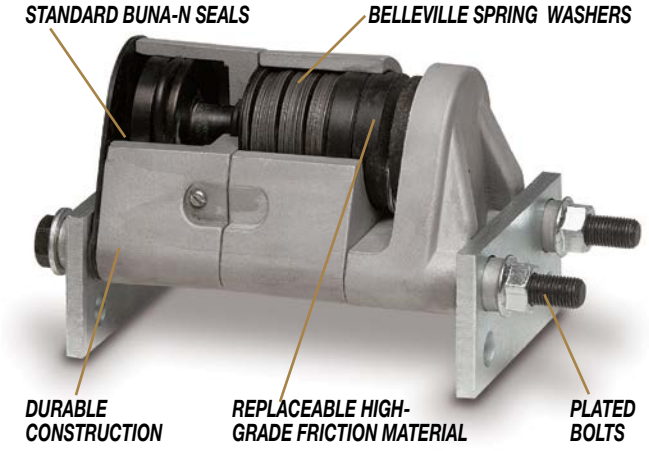

Tolomatic offers spring applied brakes in sizes ranging from FS20 Series to FS595 Series. These brakes require pressure (normally hydraulic) for disc release. Braking force is provided by a stack (or stacks) of Belleville spring washers. The concave washers are capable of storing enormous force. When the brake is pressurized a piston(s) moves to compress the spring washer stack(s), thus releasing the disc. These calipers feature replaceable, high-grade friction material, aluminum or cast iron construction (depending on model), Buna-N seals and zinc plated bolts. Options include EPR seals, retractable pistons and manual compensators. (See pages 62 to 75)

DISC AND HUBS



Tolomatic offers several discs and hubs to fit your application. Most are made of carbon 1010 steel, are flat within .010 inch, stress relieved and blanchard ground to an 80 (RMS) microinch finish. Discs also feature socket head cap screw fasteners and key way set screws. Standard disc diameters are 6-5/16, 8,10, 12 and 16 inches. Disc thicknesses range from 5/32" to 1/2". Available: Fixed Hub and Disc Assemblies, Fixed Hub and Disc Assemblies with Q.D. Bushings, Q.D. Bushings and Hubs, One-Piece Hub and Disc, Blank Disc, Disc with Bolt Circles and Pilot Holes, and Ventilated Disc. (See pages 76 to 83)

Viton® is a registered trademark of the E.I. Du Pont de Newmours Co., www.dupont.com

CALIPER DISC BRAKES
FEATURES
APPLICATIONS
SELECTION GRAPHS
PNEUMATIC BRAKES
P10
P20
P220
HYDRAULIC BRAKES
H10
H20
H220
H220I
H441
H960
HYDRAULIC/ MECHANICAL BRAKE COMBOS
H/ME220
MECHANICAL BRAKES
ME10
ME20
ME220
MB3
SPRING APPLIED BRAKES
FS20
FS220
FS220I
FS595
DISCS HUBS & BUSHINGS
INTENSIFIER
SELECTION
WORKSHEET

Caliper Disc Brakes

ORDER ONLINE

APPLICATIONS

CONVEYOR BELT EMERGENCY BRAKE

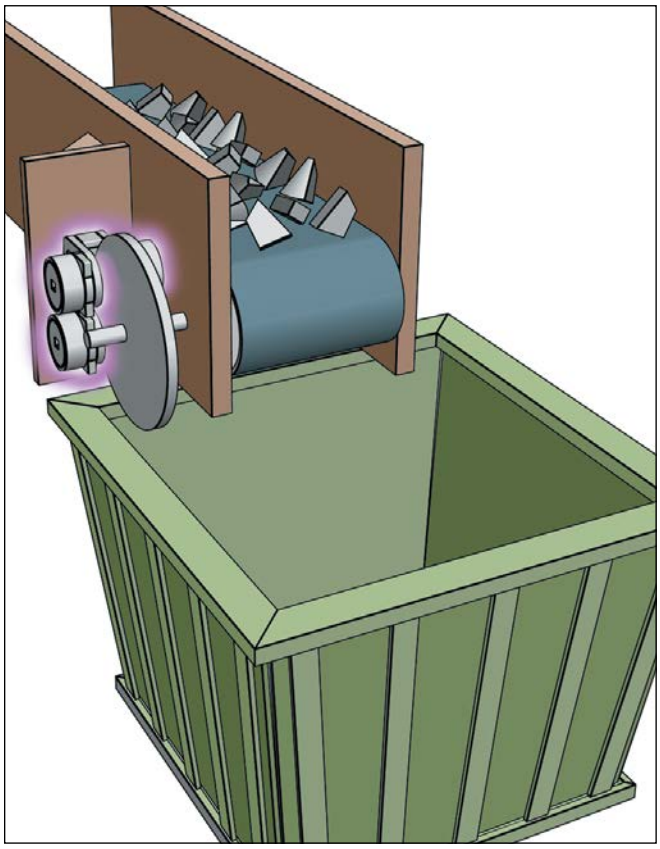

Tolomatic caliper disc brakes find uses in industrial settings all over the world. Used on everything from assembly lines to wind generators and lawn maintenance equipment, Tolomatic calipers offer the braking capacity you need at an economical price. The variety of sizes, maximum torque output and thermal capabilities insure you will find the optimal brake for your application. These illustrations are meant to help you to see ways that our calipers will work for you. Above a Spring Applied Brake is used on a conveyor belt. In this application it will provide braking when hydraulic pressure is *Not* provided to the brake. This type of braking is especially useful in situations where safety is an issue. Since a Spring Applied Brake requires hydraulic pressure to *Release* the brake, in a power shut down these brakes will engage providing positive braking.

TENSIONING APPLICATION

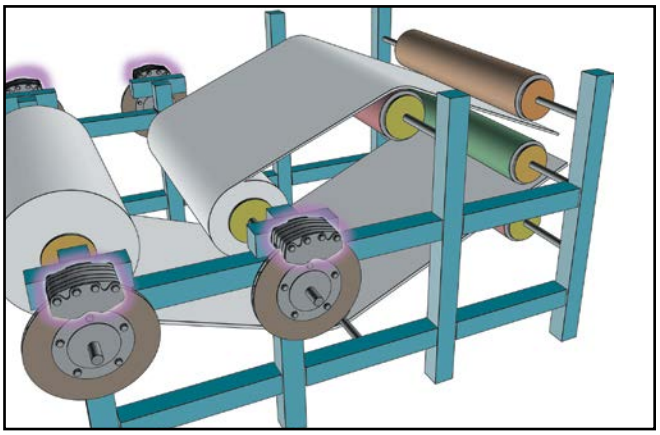

Another great place for Tolomatic brakes is tensioning/ constant slip applications. Used in everything from mylar balloon fabrication to web presses, Tolomatic pneumatic brakes provide dynamic tensioning that is adjusted by the air pressure supplied to the caliper. Because of the constant nature of this type of braking, caliper and disc are sized on thermal characteristics rather than torque.

MACHINE COMPONENTS

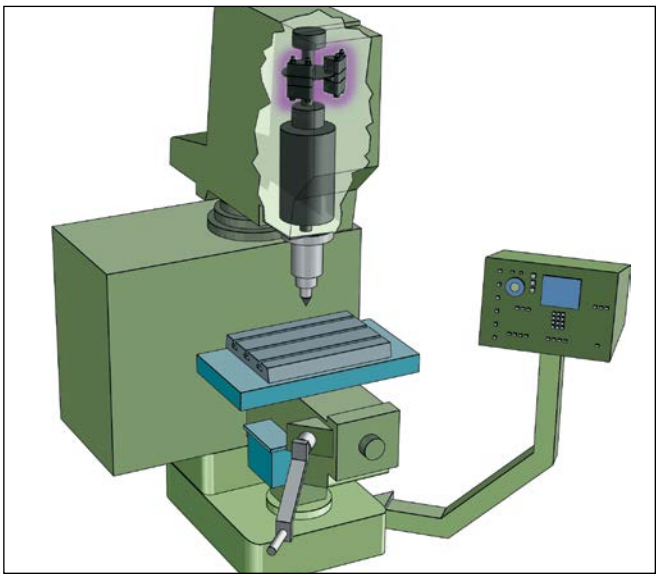

Here two Tolomatic pneumatic brakes are used to increase the productivity of a CNC milling machine. In the original design users had to wait for the machine to coast to a stop before a part could be removed or a tool changed. Electronic deceleration proved to be expensive and harmful to the motor. Tolomatic caliper disc brakes improved stopping time by 500 percent, increasing the machine's productivity and safety.

SELECTION GRAPH & TABLE

DYNAMIC TORQUE - PNEUMATIC, HYDRAULIC

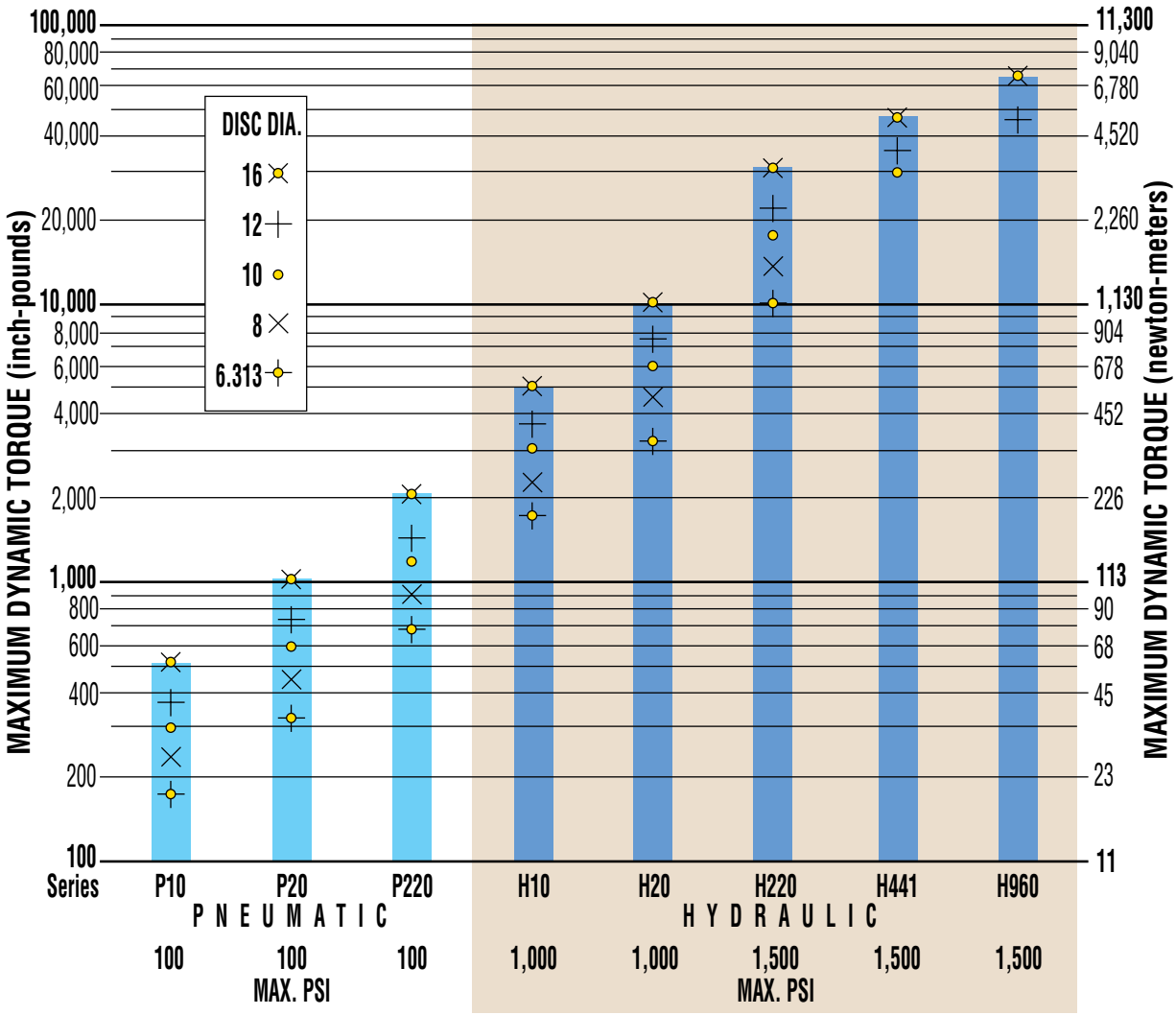

The table below includes the same information as the graph above (adding discs not sold by Tolomatic) with the maximum dynamic torque [inch-pounds] for each series brake using the disc size in left column and PSI at the bottom of the table.

Disc Dia.	P10	P20	P220	H10	H20	H220	H441	H960
6.313	174	328	685	1,737	3,285	10,282		
8	233	450	907	2,328	4,500	13,608		
10	303	594	1,184	3,028	5,940	17,755	19,539	
12	373	738	1,463	3,728	7,380	21,946	24,834	45,672
14	443	882	1,771	4,428	8,820	26,568	30,129	56,052
16	513	1,026	2,076	5,128	10,260	31,147	35,424	66,432
18							40,719	76,812
20							46,014	
22							51,309	
24							56,606	
	100	**100**	**100**	**1,000**	**1,000**	**1,500**	**1,500**	**1,500**
		MAX. PSI				**MAX. PSI**		
		PNEUMATIC				**HYDRAULIC**		

NOTE: GREY BACKGROUND INDICATES DISC SIZES NOT AVAILABLE FROM TOLOMATIC.

Note: Selection instructions and formulae begin on page 85 of this catalog. Please refer to these instructions or call 1-800-328-2174 for assistance.

Caliper Disc Brakes

ORDER ONLINE

SELECTION GRAPH & TABLE

STATIC TORQUE - PNEUMATIC, HYDRAULIC, MECHANICAL

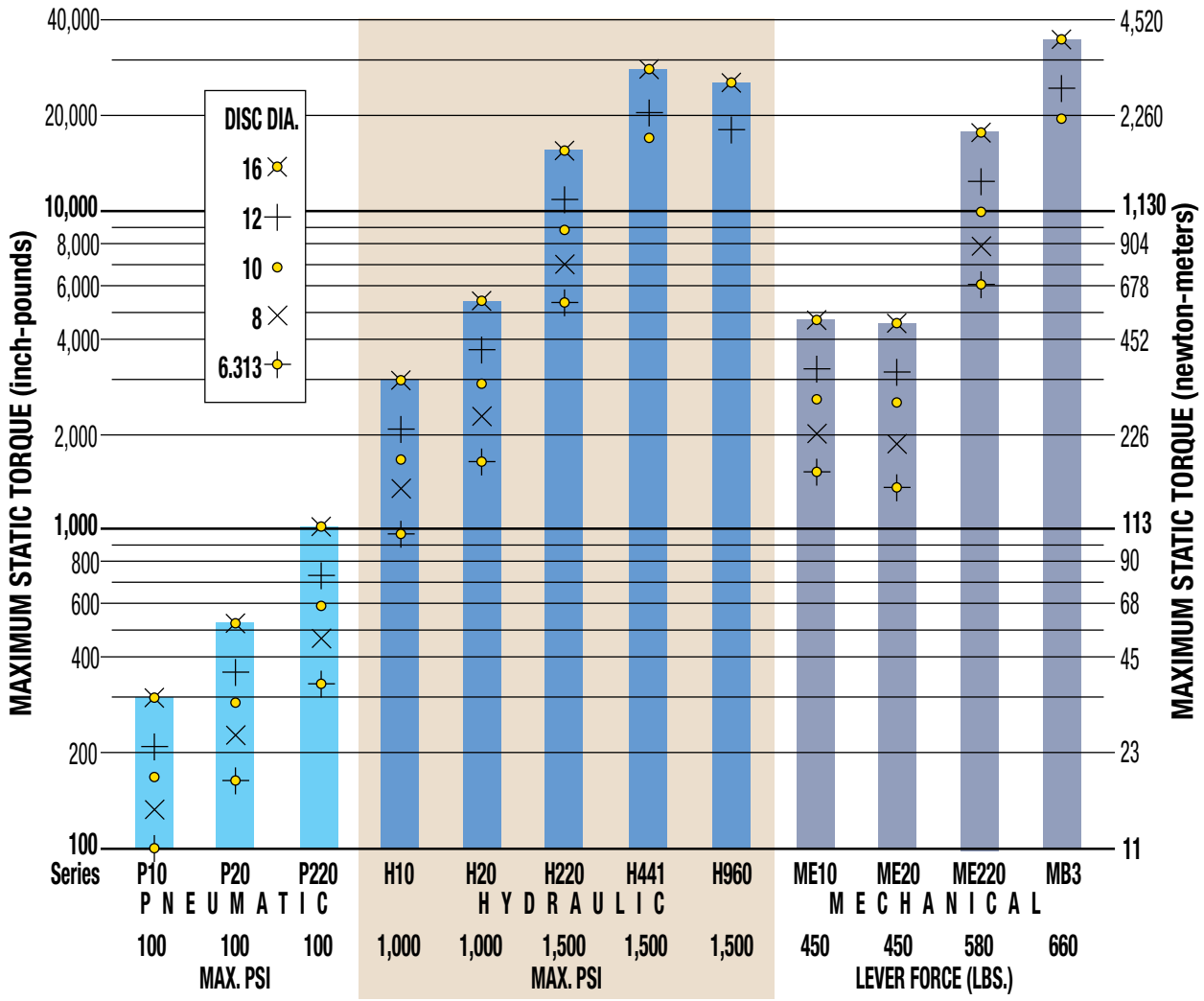

The table below includes the same information as the graph above (adding discs not sold by Tolomatic) with the maximum static torque [inch-pounds] for each series brake using the disc size in left column and PSI (or Lever Force) at the bottom of the table.

Disc Dia.	P10	P20	P220	H10	H20	H220	H441	H960	ME10	ME20	ME220	MB3
6.313	99	164	343	993	1,642	5,141				1,502	1,381	5,851
8	133	225	454	1,330	2,250	6,804				2,012	1,891	7,744
10	173	297	592	1,730	2,970	8,878	11,679		2,618	2,497	10,104	19,893
12	213	369	732	2,130	3,690	10,973	14,844	26,664	3,223	3,102	12,489	24,506
14	253	441	886	2,530	4,410	13,284	18,009	32,724	3,828	3,707	15,120	29,120
16	293	513	1,038	2,930	5,130	15,574	21,174	38,784	4,433	4,312	17,726	33,733
18							24,339	44,844				38,347
20							27,504					42,960
22							30,669					47,573
24							33,834					52,187
26												56,800
28												61,414
30												66,027
	100	**100**	**100**	**1,000**	**1,000**	**1,500**	**1,500**	**1,500**	**450**	**450**	**580**	**660**
	MAX. PSI			**MAX. PSI**					**MAX. LEVER FORCE (LBS.)**			
	PNEUMATIC			**HYDRAULIC**					**MECHANICAL**			

NOTE: GREY BACKGROUND INDICATES DISC SIZES NOT AVAILABLE FROM TOLOMATIC.

SELECTION GRAPH & TABLE

STATIC TORQUE - SPRING APPLIED

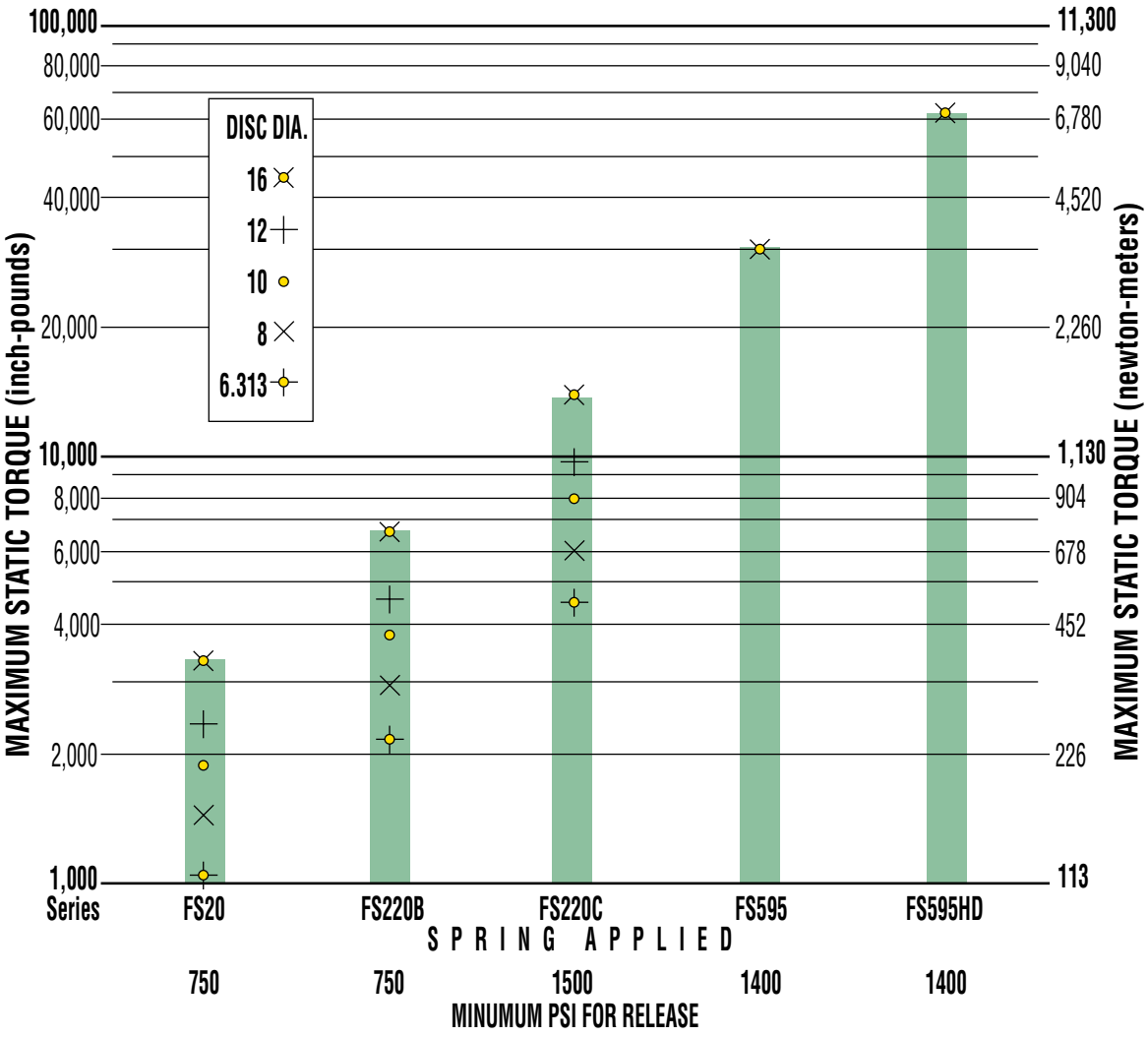

The table below includes the same information as the graph above (adding discs not sold by Tolomatic) with the maximum static torque [inch-pounds] for each series brake using the disc size in left column and release pressure (PSI) at the bottom of the table.

Disc Dia.	FS20	FS220B	FS220C	FS595	FS595 Dual
6.313	1,061	2,213	4,522		
8	1,453	2,930	5,985		
10	1,918	3,822	7,809		
12	2,383	4,724	9,652		
14	2,848	5,715	11,676	26,426	52,853
16	3,313	6,705	13,699	31,046	62,093
18				35,666	71,333
20				40,286	80,573
22				44,906	89,813
24				49,526	99,053
26				54,146	108,293
28				58,766	117,533
30				63,386	126,733
	750	**750**	**1500**	**1400**	**1400**

MINIMUM PSI FOR RELEASE

NOTE: GREY BACKGROUND INDICATES DISC SIZES NOT AVAILABLE FROM TOLOMATIC.

Note: Selection instructions and formulae begin on page 85 of this catalog. Please refer to these instructions or call 1-800-328-2174 for assistance.

Caliper Disc Brakes

ORDER ONLINE

P10 SERIES - ALUMINUM

AVAILABLE STYLES

Double Acting

FIXED MOUNT - FIXED DISC



PICTURED: 0701-0000

Single Acting

FIXED MOUNT - FLOATING DISC



PICTURED: 0705-0000

Single Acting with Floating Bracket

FLOATING MOUNT - FIXED DISC



PICTURED: 0705-0001

P10 SPECIFICATIONS

Maximum Pressure Rating:	100 PSI
Accommodates Tolomatic disc diameters:	6-5/16", 8", 10", 12", 16"
Maximum disc diameter:	none
Housing Material:	Extruded aluminum
Bolts:	Zinc plated grade 5
Seals:	Buna-N Standard
Wearable friction material:	0.47 in^3
Wearable friction material/retractable models:	0.13 in^3
Friction material:	Replaceable, high-grade
Total lining area:	1.84 in^2
Total lining area/retractable models:	1.64 in^2
Piston diameter:	1.125 in.
Fluid displacement, non-retractable:	Single acting = 0.029 in^3 Double acting = 0.029 in^3
OPTIONS	
Pistons:	Retractable piston(s)
Floating bracket:	Stamped steel construction

PERFORMANCE DATA

Dynamic Torque vs Pressure

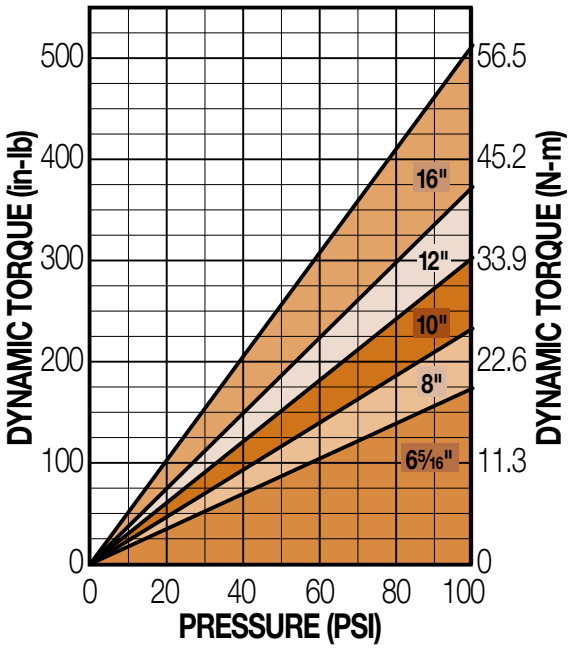

Static Torque vs Pressure

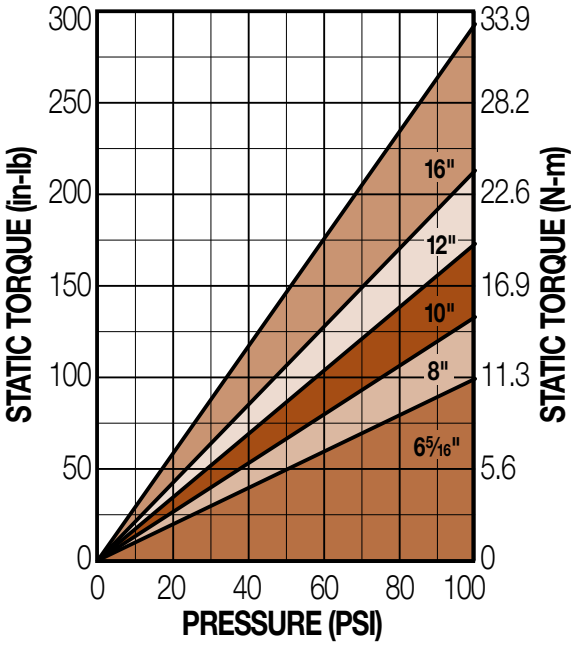

DISC SIZING EQUATIONS

DYNAMIC TORQUE (IN.-LBS.) = 0.70 x BRAKING RADIUS (IN.) x PRESSURE (PSI)
STATIC (PARKING) TORQUE (IN.-LBS.) = 0.40 x BRAKING RADIUS (IN.) x PRESSURE (PSI)
BRAKING RADIUS (IN.) = [DISC DIAMETER ÷ 2] - 0.624

NOTE: Braking Radius values are listed under "Mounting Dimensions" on page 33

DOUBLE ACTING

FIXED MOUNT - FIXED DISC

Accommodates disc thickness: 5/32" 1/4" 3/8" 1/2"

Weight 1.0 lbs. .45 kgs.

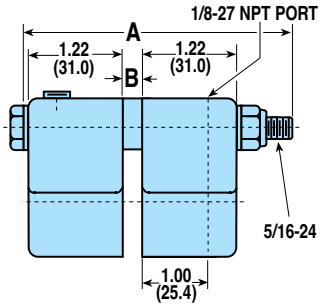

MODEL CODE	DISC THK.	A	B	OPTIONS / DESCRIPTION	ASSEMBLY NUMBER
P10DA	5/32"	3.50"	.281"	Double Acting	0701-0000
P10DAR	5/32"	3.50"	.281"	Double Acting, Retractable Pistons	0708-0000
P10DB	1/4"	3.50"	.375"	Double Acting	0702-0000
P10DBR	1/4"	3.50"	.375"	Double Acting, Retractable Pistons	0709-0000
P10DER	1/2"	4.00"	.625"	Double Acting, Retractable Pistons	0709-0003
P10DL	3/8"	4.00"	.500"	Double Acting	0702-0002
P10DLR	3/8"	4.00"	.500"	Double Acting, Retractable Pistons	0709-0002

SINGLE ACTING

FIXED MOUNT - FLOATING DISC

Accommodates disc thickness: 5/32" 1/4"

Weight .75 lbs. .34 kgs.

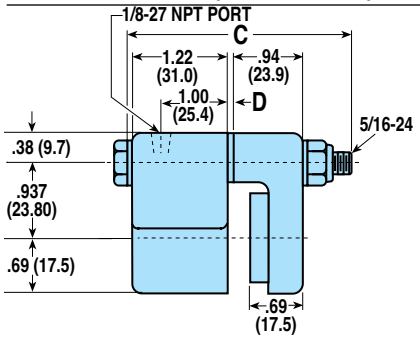

MODEL CODE	DISC THK.	C	D	OPTIONS / DESCRIPTION	ASSEMBLY NUMBER
P10SA	5/32"	3.00"	–	Single Acting	0705-0000
P10SB	1/4"	3.00"	.094"	Single Acting	0703-0000

SINGLE ACTING WITH FLOATING BRACKET

FLOATING MOUNT - FIXED DISC

Accommodates disc thickness: 5/32" 1/4"

Weight 1.5 lbs. .68 kgs.

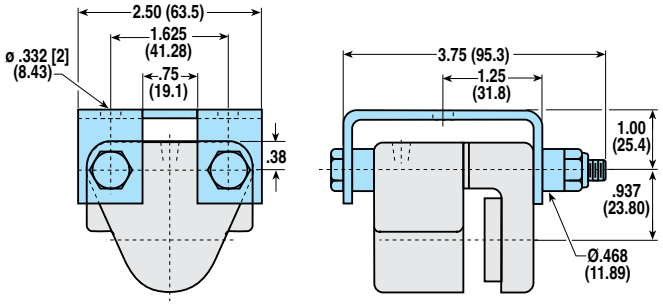

See SINGLE ACTING dimensional drawing for additional measurements

MODEL CODE	DISC THK.	C	D	OPTIONS / DESCRIPTION	ASSEMBLY NUMBER
P10SAF	5/32"	3.00"	–	Single Acting, Floating Bracket	0705-0001
P10SBF	1/4"	3.00"	.094"	Single Acting, Floating Bracket	0703-0001

MOUNTING DIMENSIONS

Disc Diameter	**E**	6.313"	8"	10"	12"	16"
	F	3.469"	4.313"	5.313"	6.313"	8.313"
Braking Radius	**G**	2.532"	3.376"	4.376"	5.376"	7.376"

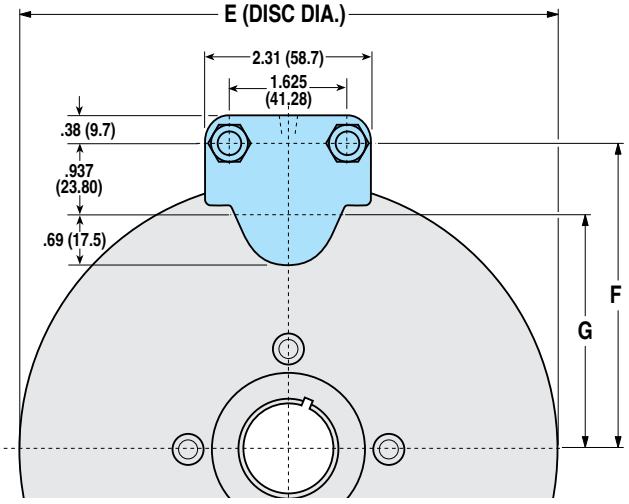

BRAKE MODEL LETTER CODES

A 5/32" Thick Disc	**E** 1/2" Thick Disc	**P** Pneumatic Brake
B 1/4" Thick Disc	**F** Floating Bracket Mount	**R** Retractable Piston(s)
D Double Acting	**L** 3/8" Thick Disc	**S** Single Acting

Caliper Disc Brakes

ORDER ONLINE

P20 SERIES - ALUMINUM

AVAILABLE STYLES

Double Acting

FIXED MOUNT - FIXED DISC



PICTURED: 0720-0000

Single Acting

FIXED MOUNT - FLOATING DISC



PICTURED: 0724-0000

Single Acting with Floating Bracket

FLOATING MOUNT - FIXED DISC



PICTURED: 0724-0001

P20 SPECIFICATIONS

Maximum Pressure Rating:	100 PSI
Accommodates Tolomatic disc diameters:	6-5/16", 8", 10", 12", 16"
Maximum disc diameter:	none
Housing Material:	Extruded aluminum
Bolts:	Zinc plated grade 8
Seals:	Buna-N Standard
Wearable friction material:	0.8 in^3
Wearable friction material/retractable models:	0.5 in^3
Friction material:	Replaceable, high-grade
Total lining area:	3.75 in^2
Piston diameter:	1.625 in.
Fluid displacement, non-retractable:	Single acting = 0.062 in^3 Double acting = 0.062 in^3
OPTIONS	
Pistons:	Retractable piston(s)
Floating bracket:	Stamped steel construction

PERFORMANCE DATA

Dynamic Torque vs Pressure

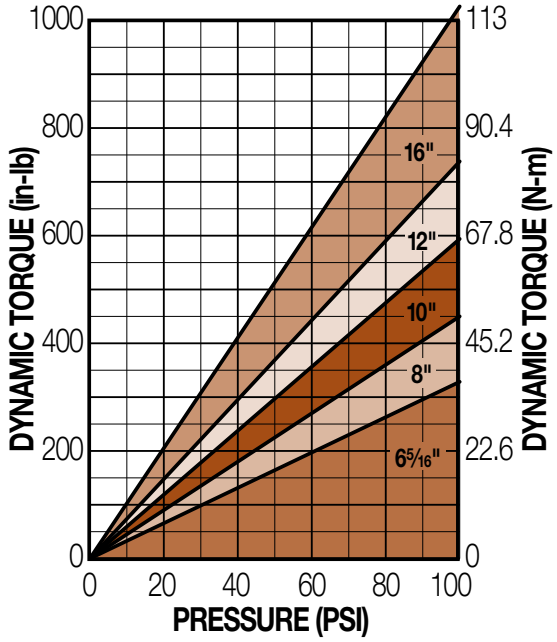

Static Torque vs Pressure

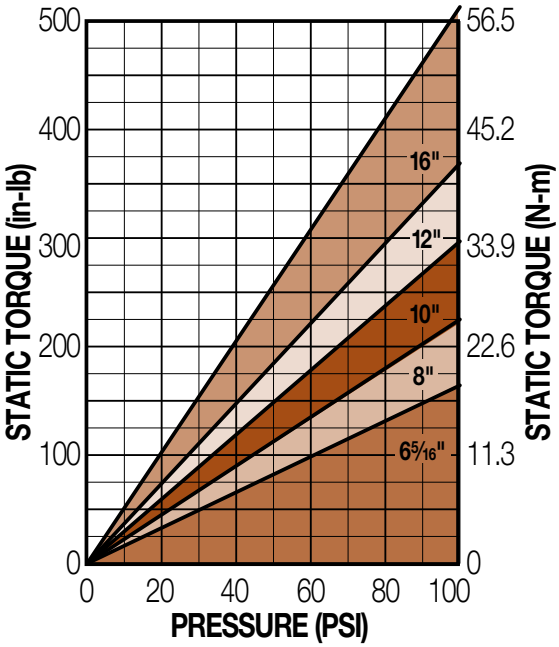

DISC SIZING EQUATIONS

DYNAMIC TORQUE (IN.-LBS.) = 1.44 x BRAKING RADIUS (IN.) x PRESSURE (PSI)
STATIC (PARKING) TORQUE (IN.-LBS.) = 0.72 x BRAKING RADIUS (IN.) x PRESSURE (PSI)
BRAKING RADIUS (IN.) = [DISC DIAMETER ÷ 2] - 0.875

NOTE: Braking Radius values are listed under "Mounting Dimensions" on page 35

DOUBLE ACTING

FIXED MOUNT - FIXED DISC

Accommodates disc thickness: 5/32" 1/4" 3/8" 1/2"

Weight 2.0 lbs. .91 kgs.

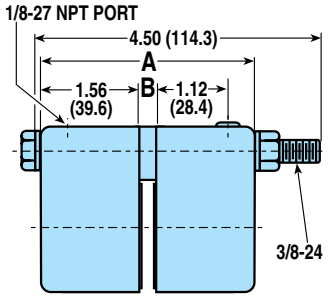

MODEL CODE	DISC THK.	A	B	OPTIONS / DESCRIPTION	ASSEMBLY NUMBER
P20DA	5/32"	3.41"	.281"	Double Acting	0720-0000
P20DAR	5/32"	3.41"	.281"	Double Acting, Retractable Pistons	0728-0000
P20DB	1/4"	3.50"	.375"	Double Acting	0721-0000
P20DBR	1/4"	3.50"	.375"	Double Acting, Retractable Pistons	0729-0000
P20DL	3/8"	3.62"	.500"	Double Acting	0720-0013
P20DLR	3/8"	3.62"	.500"	Double Acting, Retractable Pistons	0729-0001
P20DE	1/2"	3.75"	.625"	Double Acting	0725-0000
P20DER	1/2"	3.75"	.625"	Double Acting, Retractable Pistons	0719-0000

SINGLE ACTING

FIXED MOUNT - FLOATING DISC

Accommodates disc thickness: 5/32" 1/4" 3/8"

Weight 1.5 lbs. .68 kgs.

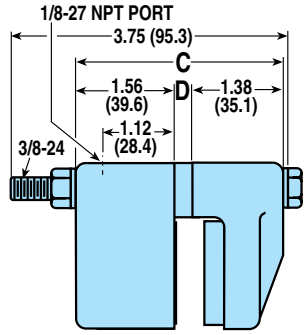

MODEL CODE	DISC THK.	C	D	OPTIONS / DESCRIPTION	ASSEMBLY NUMBER
P20SA	5/32"	2.94"	–	Single Acting	0724-0000
P20SB	1/4"	3.03"	.093"	Single Acting	0722-0000
P20SL	3/8"	3.16"	.219"	Single Acting	0722-0002

SINGLE ACTING WITH FLOATING BRACKET

FLOATING MOUNT - FIXED DISC

Accommodates disc thickness: 5/32" 1/4"

Weight 2.0 lbs. .91 kgs.

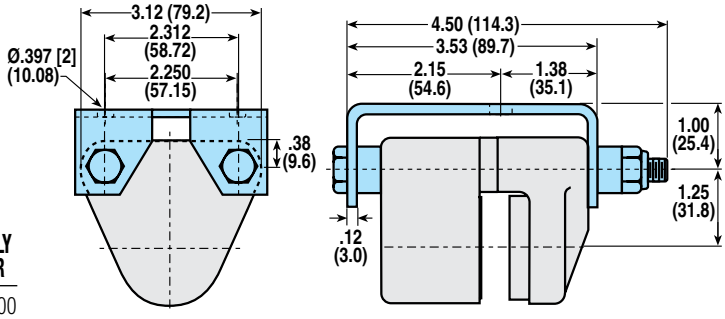

See SINGLE ACTING dimensional drawing for additional measurements

MODEL CODE	DISC THK.	C	D	OPTIONS / DESCRIPTION	ASSEMBLY NUMBER
P20SAF	5/32"	2.94"	–	Single Acting, Floating Bracket	0724-0001
P20SBF	1/4"	3.03"	.093"	Single Acting, Floating Bracket	0722-0001

MOUNTING DIMENSIONS

Disc Diameter	**E**	6.313"	8"	10"	12"	16"
	F	3.531"	4.375"	5.375"	6.375"	8.375"
Braking Radius	**G**	2.281"	3.125"	4.125"	5.125"	7.125"

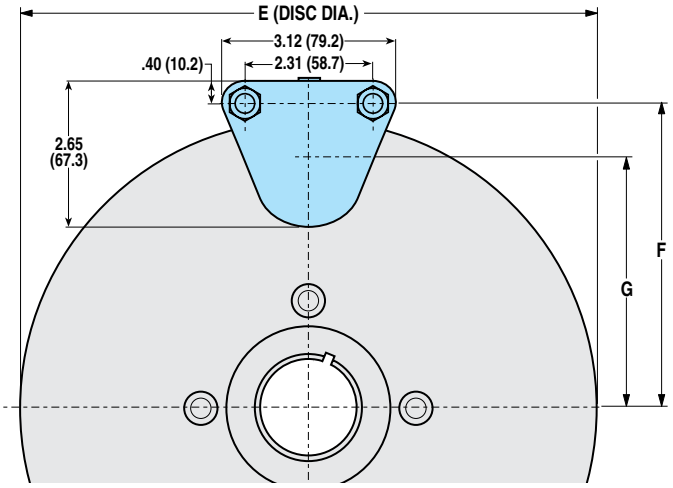

BRAKE MODEL LETTER CODES

A 5/32" Thick Disc	**E** 1/2" Thick Disc	**P** Pneumatic Brake
B 1/4" Thick Disc	**F** Floating Bracket Mount	**R** Retractable Piston(s)
D Double Acting	**L** 3/8" Thick Disc	**S** Single Acting

Caliper Disc Brakes

ORDER ONLINE

P220 SERIES - ALUMINUM

AVAILABLE STYLES

Double Acting

FIXED MOUNT - FIXED DISC



PICTURED: 0735-0100

Single Acting

FIXED MOUNT - FLOATING DISC



PICTURED: 0733-0000

Single Acting with Floating Bracket

FLOATING MOUNT - FIXED DISC



PICTURED: 0733-0022

P220 SPECIFICATIONS

Maximum Pressure Rating:	100 PSI
Accommodates Tolomatic disc diameters:	6-5/16", 8", 10", 12", 16"
Maximum disc diameter:	16"
Housing Material:	Die cast aluminum
Bolts:	Zinc plated grade 8
Seals:	Buna-N Standard
Wearable friction material:	1.6 in^3
Wearable friction material/retractable models:	1.0 in^3
Friction material:	Replaceable, high-grade
Total lining area:	7.5 in^2
Piston diameter:	1.625 in.
Fluid displacement, non-retractable:	Single acting = 0.124 in^3 Double acting = 0.124 in^3

OPTIONS

Pistons:	Retractable piston(s)
Floating bracket:	Available

PERFORMANCE DATA

Dynamic Torque vs Pressure

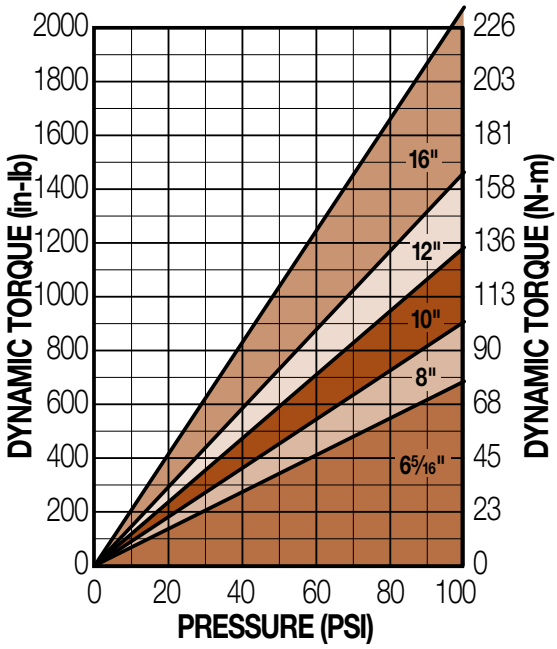

Static Torque vs Pressure

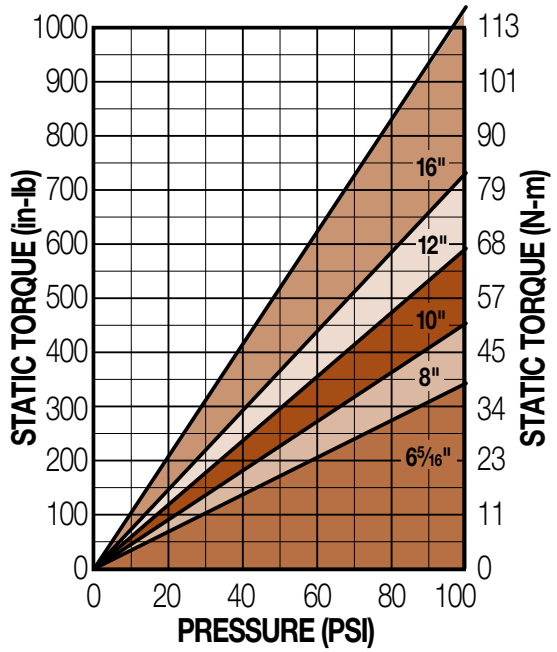

DISC SIZING EQUATIONS

DYNAMIC TORQUE (IN.-LBS.) = 2.88 x BRAKING RADIUS (IN.) x PRESSURE (PSI)
STATIC (PARKING) TORQUE (IN.-LBS.) = 1.44 x BRAKING RADIUS (IN.) x PRESSURE (PSI)

NOTE: Braking Radius values are listed under "Mounting Dimensions" on page 37

DOUBLE ACTING

FIXED MOUNT - FIXED DISC

Accommodates disc thickness: 5/32" 1/4" 1/2"

Weight 4.0 lbs. 1.82 kgs.

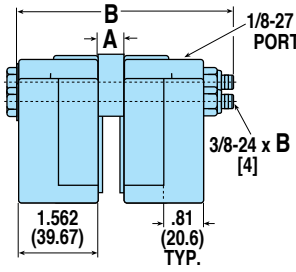

MODEL CODE	DISC THK.	A	B	OPTIONS / DESCRIPTION	ASSEMBLY NUMBER
P220DA	5/32"	.281"	4.50"	Double Acting	0735-0100
P220DAR	5/32"	.281"	4.50"	Double Acting, Retractable Pistons	0736-0110
P220DB	1/4"	.375"	4.50"	Double Acting	0735-0200
P220DBR	1/4"	.375"	4.50"	Double Acting, Retractable Pistons	0736-0210
P220DE	1/2"	.625"	5.00"	Double Acting	0735-0300
P220DER	1/2"	.625"	5.00"	Double Acting, Retractable Pistons	0736-0310

SINGLE ACTING

FIXED MOUNT - FLOATING DISC

Accommodates disc thickness: 5/32" 1/4" 1/2"

Weight 3.0 lbs. 1.36 kgs.

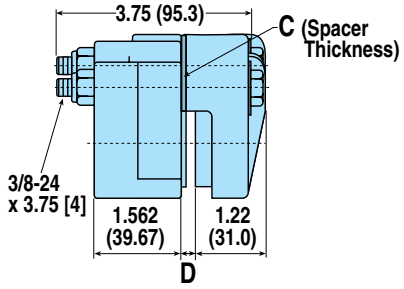

MODEL CODE	DISC THK.	C	D	OPTIONS / DESCRIPTION	ASSEMBLY NUMBER
P220SA	5/32"	–	.25"	Single Acting	0733-0000
P220SB	1/4"	.094"	.34"	Single Acting	0733-0100
P220SE	1/2"	.344"	.59"	Single Acting	0733-0200

BRAKE MODEL LETTER CODES

A 5/32" Thick Disc	**E** 1/2" Thick Disc	**R** Retractable Piston(s)
B 1/4" Thick Disc	**F** Floating Bracket Mount	**S** Single Acting
D Double Acting	**P** Pneumatic Brake	

SINGLE ACTING WITH FLOATING BRACKET

FLOATING MOUNT - FIXED DISC

Accommodates disc thickness: 5/32" 1/4" 1/2"

Weight 4.5 lbs. 2.04 kgs.

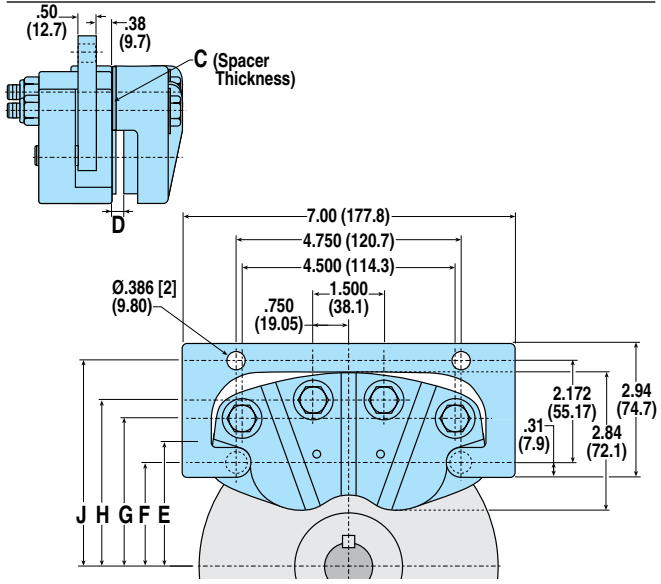

See SINGLE ACTING dimensional drawing for additional measurements

MODEL CODE	DISC THK.	C	D	OPTIONS / DESCRIPTION	ASSEMBLY NUMBER
P220SAF	5/32"	–	.25"	Single Acting, Floating Bracket	0733-0020
P220SBF	1/4"	.094"	.34"	Single Acting, Floating Bracket	0733-0120
P220SEF	1/2"	.344"	.59"	Single Acting, Floating Bracket	0733-0220

MOUNTING DIMENSIONS

Disc Diameter		6.313"	8"	10"	12"	16"
Braking Radius	**E**	2.36"	3.18"	4.14"	5.11"	7.17"
	F	2.11"	3.00"	4.00"	5.00"	7.09"
	G	3.05"	3.94"	4.94"	5.94"	8.03"
	H	3.42"	4.32"	5.32"	6.32"	8.41"
	J	4.28"	5.17"	6.17"	7.17"	9.26"

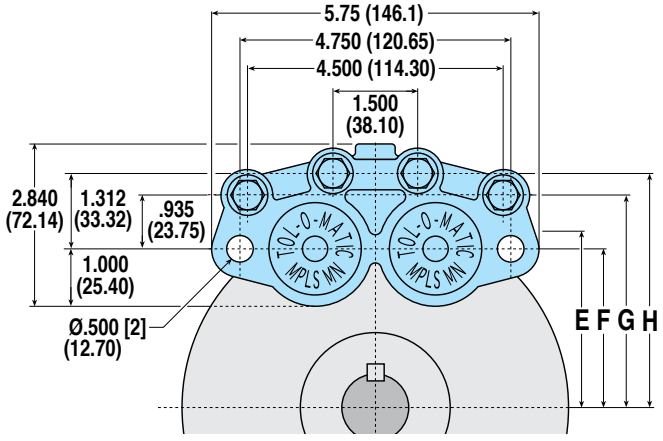

Caliper Disc Brakes

ORDER ONLINE

H10 SERIES - ALUMINUM

AVAILABLE STYLES

Double Acting

FIXED MOUNT - FIXED DISC



PICTURED: 0701-0010

Single Acting

FIXED MOUNT - FLOATING DISC



PICTURED: 0705-0010

Single Acting with Floating Bracket

FLOATING MOUNT - FIXED DISC



PICTURED: 0705-0011

H10 SPECIFICATIONS

Maximum Pressure Rating:	1,000 PSI
Accommodates Tolomatic disc diameters:	6-5/16", 8", 10", 12", 16"
Maximum disc diameter:	none
Housing Material:	Extruded aluminum
Bolts:	Zinc plated grade 5
Seals:	Buna-N Standard
Wearable friction material:	0.47 in^3
Wearable friction material/retractable models:	0.13 in^3
Friction material:	Replaceable, high-grade
Total lining area:	1.84 in^2
Total lining area/retractable materials:	1.64 in^2
Piston diameter:	1.125 in.
Fluid displacement, non-retractable:	Single acting = 0.029 in^3 Double acting = 0.029 in^3
OPTIONS	
Seals:	EPR seals
Pistons:	Retractable piston(s)
Floating bracket:	Stamped steel construction

PERFORMANCE DATA

Dynamic Torque vs Pressure

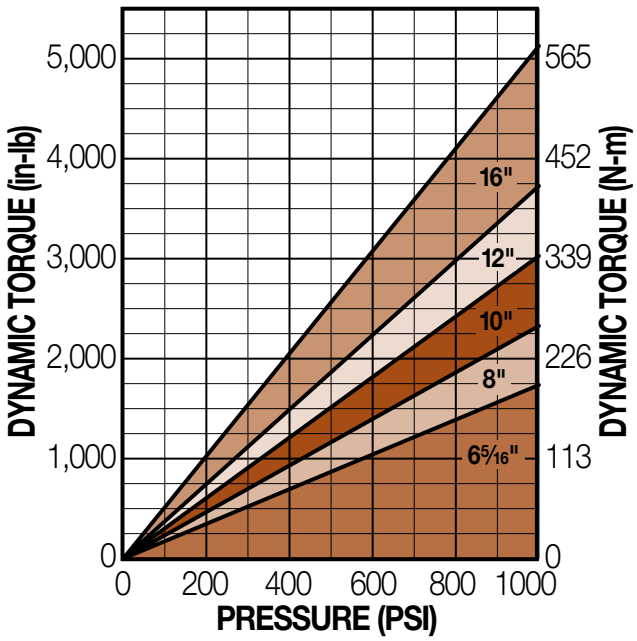

Static Torque vs Pressure

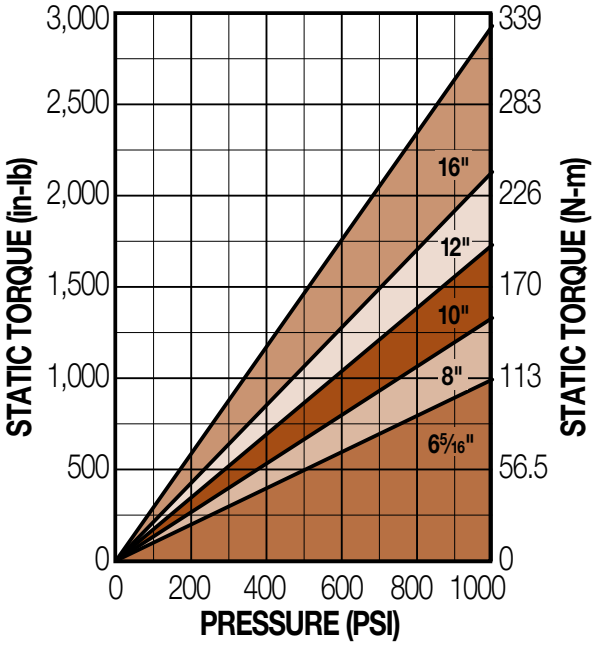

DISC SIZING EQUATIONS

DYNAMIC TORQUE (IN.-LBS.) = 0.70 x BRAKING RADIUS (IN.) x PRESSURE (PSI)
STATIC (PARKING) TORQUE (IN.-LBS.) = 0.40 x BRAKING RADIUS (IN.) x PRESSURE (PSI)
BRAKING RADIUS (IN.) = [DISC DIAMETER ÷ 2] - 0.624

NOTE: Braking Radius values are listed under "Mounting Dimensions" on page 39

DOUBLE ACTING

FIXED MOUNT - FIXED DISC

Accommodates disc thickness: 5/32" 1/4"

Weight 1.0 lbs. .45 kgs.

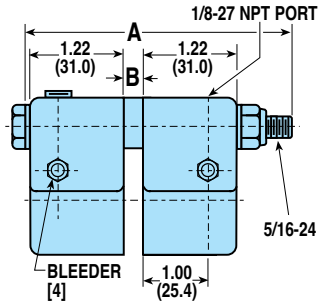

MODEL CODE	DISC THK.	A	B	OPTIONS / DESCRIPTION	ASSEMBLY NUMBER
H10DAC	5/32"	3.50"	.281"	Double Acting	0701-0010
H10DACG	5/32"	3.50"	.281"	Double Acting, EPR Seals	0701-0011
H10DARC	5/32"	3.50"	.281"	Double Acting, Retractable Pistons	0708-0010
H10DARCG	5/32"	3.50"	.281"	Double Acting, Retr Pist, EPR Seals	0708-0011
H10DBC	1/4"	3.50"	.375"	Double Acting	0702-0010
H10DBCG	1/4"	3.50"	.375"	Double Acting, EPR Seals	0702-0011
H10DBRC	1/4"	3.50"	.375"	Double Acting, Retractable Pistons	0709-0010
H10DBRCG	1/4"	3.50"	.375"	Double Acting, Retr Pist, EPR Seals	0709-0011

SINGLE ACTING

FIXED MOUNT - FLOATING DISC

Accommodates disc thickness: 5/32" 1/4"

Weight .75 lbs. .34 kgs.

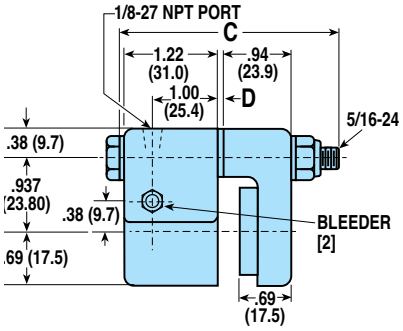

MODEL CODE	DISC THK.	C	D	OPTIONS / DESCRIPTION	ASSEMBLY NUMBER
H10SAC	5/32"	3.00"	–	Single Acting	0705-0010
H10SACG	5/32"	3.00"	–	Single Acting, EPR Seals	0705-0008
H10SBC	1/4"	3.00"	.094"	Single Acting	0703-0010

SINGLE ACTING WITH FLOATING BRACKET

FLOATING MOUNT - FIXED DISC

Accommodates disc thickness: 5/32" 1/4"

Weight 1.5 lbs. .68 kgs.

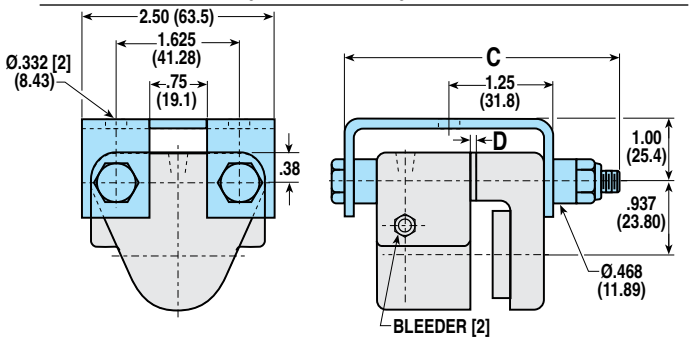

See SINGLE ACTING dimensional drawing for additional measurements

MODEL CODE	DISC THK.	C	D	OPTIONS / DESCRIPTION	ASSEMBLY NUMBER
H10SAFC	5/32"	3.75"	–	Single Acting, Floating Bracket	0705-0011
H10SAFCG	5/32"	3.75"	–	Single Acting, FtgBrkt,EPR Seals	0705-0009
H10SBFC	1/4"	3.75"	.094"	Single Acting, Floating Bracket	0703-0013

MOUNTING DIMENSIONS

Disc Diameter	E	6.313"	8"	10"	12"	16"
	F	3.469"	4.313"	5.313"	6.313"	8.313"
Braking Radius	G	2.532"	3.376"	4.376"	5.376"	7.376"

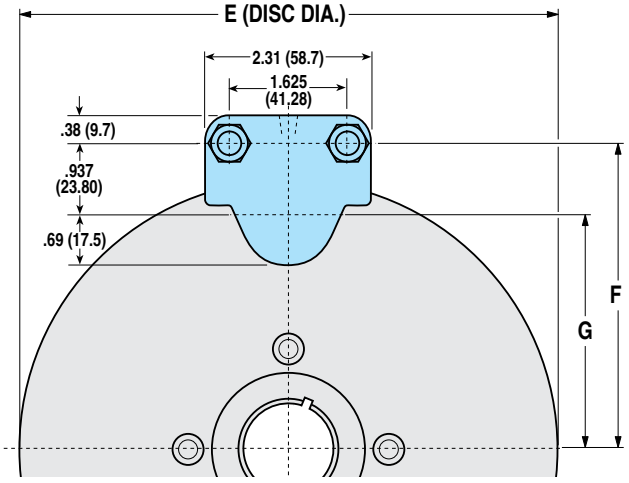

BRAKE MODEL LETTER CODES

A 5/32" Thick Disc	**D** Double Acting	**H** Hydraulic Brake
B 1/4" Thick Disc	**F** Floating Bracket Mount	**R** Retractable Piston(s)
C With Bleeder Fitting	**G** EPR Seals	**S** Single Acting

Caliper Disc Brakes

ORDER ONLINE

H20 SERIES - ALUMINUM

AVAILABLE STYLES

Double Acting

FIXED MOUNT - FIXED DISC



PICTURED: 0720-0010

Single Acting

FIXED MOUNT - FLOATING DISC



PICTURED: 0724-0010

Single Acting with Floating Bracket

FLOATING MOUNT - FIXED DISC



PICTURED: 0724-0011

H20 SPECIFICATIONS

Maximum Pressure Rating:	1,000 PSI
Accommodates Tolomatic disc diameters:	6-5/16", 8", 10", 12", 16"
Maximum disc diameter:	none
Housing Material:	Extruded aluminum
Bolts:	Zinc plated grade 8
Seals:	Buna-N Standard
Wearable friction material:	0.8 in^3
Wearable friction material/retractable models:	0.5 in^3
Friction material:	Replaceable, high-grade
Total lining area:	3.75 in^2
Piston diameter:	1.625 in.
Fluid displacement, non-retractable:	Single acting = 0.062 in^3 Double acting = 0.062 in^3
OPTIONS	
Seals:	EPR seals
Pistons:	Retractable piston(s)
Floating bracket:	Stamped steel construction

PERFORMANCE DATA

Dynamic Torque vs Pressure

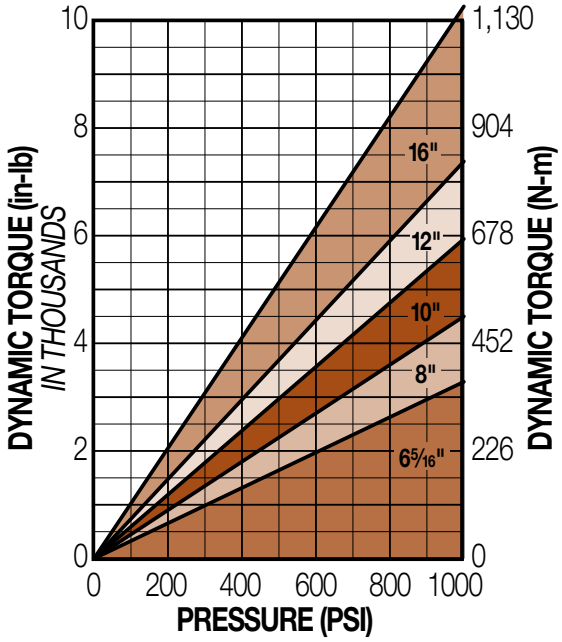

Static Torque vs Pressure

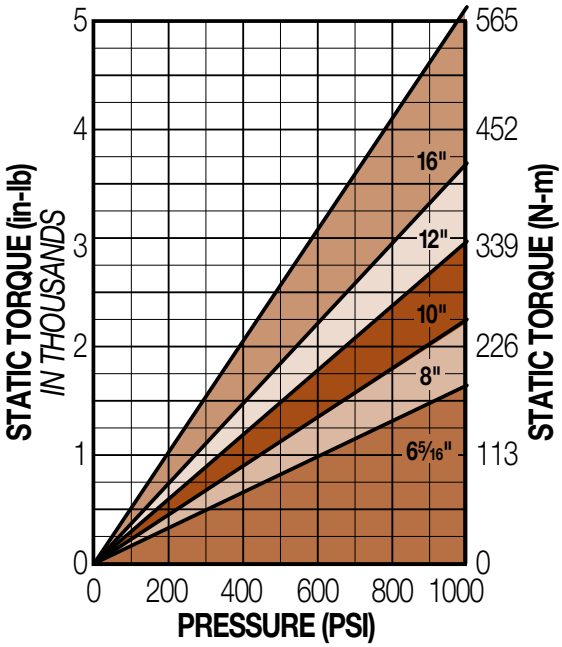

DISC SIZING EQUATIONS

DYNAMIC TORQUE (IN.-LBS.) = 1.44 x BRAKING RADIUS (IN.) x PRESSURE (PSI)
STATIC (PARKING) TORQUE (IN.-LBS.) = 0.72 x BRAKING RADIUS (IN.) x PRESSURE (PSI)
BRAKING RADIUS (IN.) = [DISC DIAMETER ÷ 2] - 0.875

NOTE: Braking Radius values are listed under "Mounting Dimensions" on page 41

DOUBLE ACTING

FIXED MOUNT - FIXED DISC

Accommodates disc thickness: 5/32" 1/4" 3/8" 1/2"

Weight 2.0 lbs. .91 kgs.

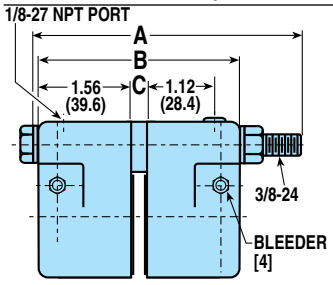

MODEL CODE	DISC THK.	A	B	C	OPTIONS / DESCRIPTION	ASSEMBLY NUMBER
H20DAC	5/32"	4.50"	3.41"	.281"	Double Acting	0720-0010
H20DACG	5/32"	4.50"	3.41"	.281"	Double Acting, EPR Seals	0720-0011
H20DARC	5/32"	4.50"	3.41"	.281"	Dbl. Acting, Retractable Pistons	0728-0010
H20DARCG	5/32"	4.50"	3.41"	.281"	Dbl. Acting, Retr Pist, EPR Seals	0728-0011
H20DBC	1/4"	4.50"	3.50"	.375"	Double Acting	0721-0010
H20DBCG	1/4"	4.50"	3.50"	.375"	Double Acting, EPR Seals	0721-0011
H20DBRC	1/4"	4.50"	3.50"	.375"	Dbl. Acting, Retractable Pistons	0729-0010
H20DBRCG	1/4"	4.50"	3.50"	.375"	Dbl. Acting, Retr Pist, EPR Seals	0729-0011
H20DLRC	3/8"	4.50"	3.62"	.500"	Dbl. Acting, Retractable Pistons	0729-0008
H20DEC	1/2"	5.00"	3.75"	.625"	Double Acting	0725-0010
H20DECG	1/2"	5.00"	3.75"	.625"	Double Acting, EPR Seals	0725-0011
H20DERC	1/2"	5.00"	3.75"	.625"	Dbl. Acting, Retractable Pistons	0719-0010
H20DERCG	1/2"	5.00"	3.75"	.625"	Dbl. Acting, Retr Pist, EPR Seals	0719-0011

SINGLE ACTING

FIXED MOUNT - FLOATING DISC

Accommodates disc thickness: 5/32" 1/4" 3/8"

Weight 1.5 lbs. .68 kgs.

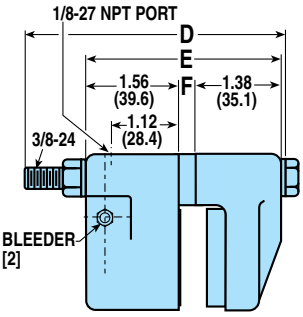

MODEL CODE	DISC THK.	D	E	F	OPTIONS / DESCRIPTION	ASSEMBLY NUMBER
H20SAC	5/32"	3.75"	2.94"	–	Single Acting	0724-0010
H20SACG	5/32"	3.75"	2.94"	–	Single Acting, EPR Seals	0724-0012
H20SBC	1/4"	3.75"	3.03"	.094"	Single Acting	0722-0010
H20SBCG	1/4"	3.75"	3.03"	.094"	Single Acting, EPR Seals	0722-0013
H20SLC	3/8"	4.00"	3.16"	.219"	Single Acting	0724-0014
H20SLCG	3/8"	4.00"	3.16"	.219"	Single Acting, EPR Seals	0724-0016

SINGLE ACTING WITH FLOATING BRACKET

FLOATING MOUNT - FIXED DISC

Accommodates disc thickness: 5/32" 1/4"

Weight 2.0 lbs. .91 kgs.

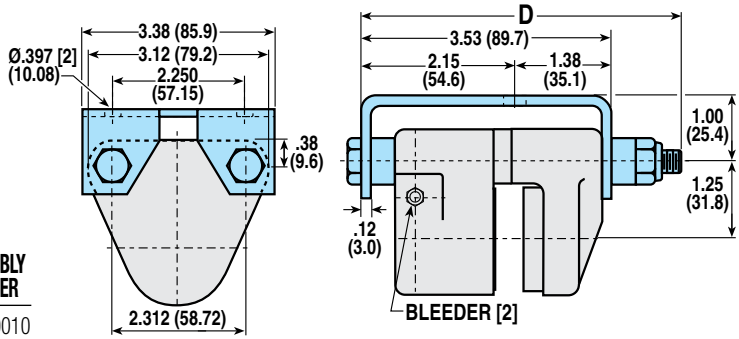

See SINGLE ACTING dimensional drawing for additional measurements

MODEL CODE	DISC THK.	D	E	F	OPTIONS / DESCRIPTION	ASSEMBLY NUMBER
H20SAFC	5/32"	4.50"	2.94"	–	Sng Act, Floating Bracket	0724-0011
H20SAFCG	5/32"	4.50"	2.94"	–	Sng Act, Fltg Brkt, EPR Seals	0724-0013
H20SBFC	1/4"	4.50"	3.03"	.094"	Sng Act, Floating Bracket	0722-0011
H20SBFCG	1/4"	4.50"	3.03"	.094"	Sng Act, Fltg Brkt, EPR Seals	0722-0014

MOUNTING DIMENSIONS

Disc Diameter	G	6.313"	8"	10"	12"	16"
	H	3.531"	4.375"	5.375"	6.375"	8.375"
Braking Radius	J	2.281"	3.125"	4.125"	5.125"	7.125"

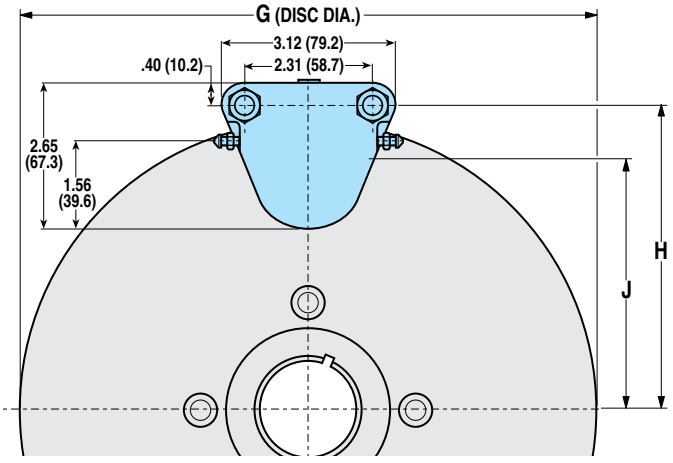

BRAKE MODEL LETTER CODES

A 5/32" Thick Disc	**E** 1/2" Thick Disc	**L** 3/8" Thick Disc
B 1/4" Thick Disc	**F** Floating Bracket Mount	**R** Retractable Piston(s)
C With Bleeder Fitting	**G** EPR Seals	**S** Single Acting
D Double Acting	**H** Hydraulic Brake	

Caliper Disc Brakes

ORDER ONLINE

H220 SERIES - ALUMINUM

AVAILABLE STYLES

Double Acting

FIXED MOUNT - FIXED DISC



PICTURED: 0735-0301

Single Acting

FIXED MOUNT - FLOATING DISC



PICTURED: 0733-0201

Single Acting with Floating Bracket

FLOATING MOUNT - FIXED DISC



PICTURED: 0733-0222

H220 SPECIFICATIONS

Maximum Pressure Rating:	1,500 PSI
Accommodates Tolomatic disc diameters:	6-5/16", 8", 10", 12", 16"
Maximum disc diameter:	16"
Housing Material:	Die cast aluminum
Bolts:	Zinc plated grade 8
Seals:	Buna-N Standard
Wearable friction material:	1.6 in^3
Wearable friction material/retractable models:	1.0 in^3
Friction material:	Replaceable, high-grade
Total lining area:	7.5 in^2
Piston diameter:	1.625 in.
Fluid displacement, non-retractable:	Single acting = 0.124 in^3 Double acting = 0.124 in^3

OPTIONS

Seals:	EPR seals
Pistons:	Retractable piston(s)
Floating bracket:	Available

PERFORMANCE DATA

Dynamic Torque vs Pressure

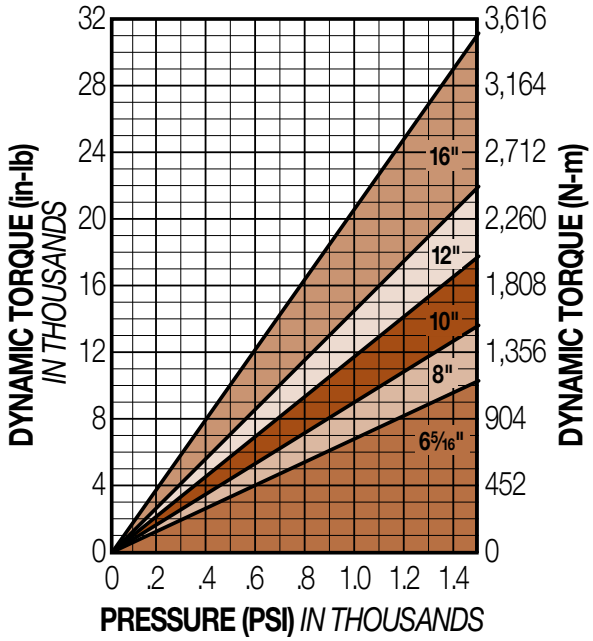

Static Torque vs Pressure

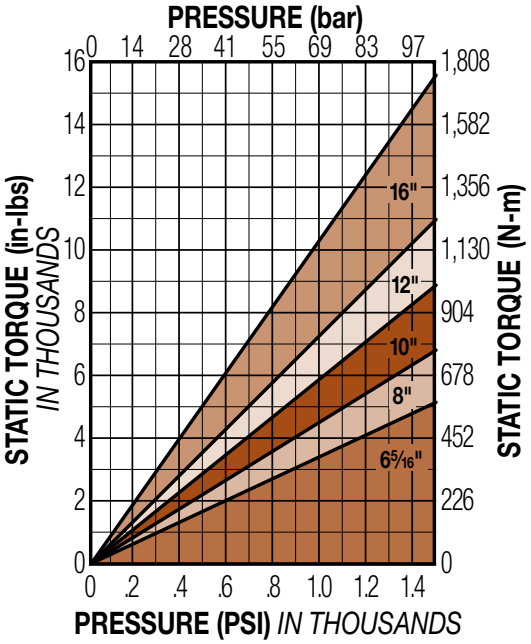

DISC SIZING EQUATIONS

DYNAMIC TORQUE (IN.-LBS.) = 2.88 x BRAKING RADIUS (IN.) x PRESSURE (PSI)
STATIC (PARKING) TORQUE (IN.-LBS.) = 1.44 x BRAKING RADIUS (IN.) x PRESSURE (PSI)
NOTE: Braking Radius values are listed under "Mounting Dimensions" on page 43

BRAKE MODEL LETTER CODES

A 5/32" Thick Disc	**D** Double Acting	**H** Hydraulic Brake
B 1/4" Thick Disc	**E** 1/2" Thick Disc	**R** Retractable Piston(s)
C With Bleeder Fitting	**F** Floating Bracket Mount	**S** Single Acting
	G EPR Seals	

DOUBLE ACTING

FIXED MOUNT - FIXED DISC

Accommodates disc thickness: 5/32" 1/4" 1/2"

Weight 4.0 lbs. 1.82 kgs.

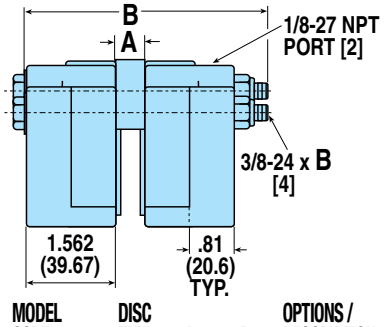

MODEL CODE	DISC THK.	A	B	OPTIONS / DESCRIPTION	ASSEMBLY NUMBER
H220DAC	5/32"	.281"	4.50"	Double Acting	0735-0101
H220DACG	5/32"	.281"	4.50"	Double Acting, EPR Seals	0735-0103
H220DARC	5/32"	.281"	4.50"	Dbl Act, Retractable Pistons	0736-0111
H220DARCG	5/32"	.281"	4.50"	Dbl Act, Retractable Pistons, EPR Seals	0736-0112
H220DBC	1/4"	.375"	4.50"	Double Acting	0735-0201
H220DBCG	1/4"	.375"	4.50"	Double Acting, EPR Seals	0735-0202
H220DBRC	1/4"	.375"	4.50"	Dbl Act, Retractable Pistons	0736-0211
H220DBRCG	1/4"	.375"	4.50"	Dbl Act, Retractable Pistons, EPR Seals	0736-0212
H220DEC	1/2"	.625"	5.00"	Double Acting	0735-0301
H220DECG	1/2"	.625"	5.00"	Double Acting, EPR Seals	0735-0302
H220DERC	1/2"	.625"	5.00"	Dbl Act, Retractable Pistons	0736-0311
H220DERCG	1/2"	.625"	5.00"	Dbl Act, Retractable Pistons, EPR Seals	0736-0312

SINGLE ACTING

FIXED MOUNT - FLOATING DISC

Accommodates disc thickness: 5/32" 1/4" 1/2"

Weight 3.0 lbs. 1.36 kgs.

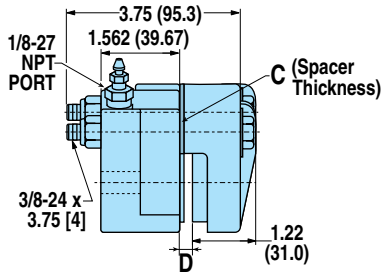

MODEL CODE	DISC THK.	C	D	OPTIONS / DESCRIPTION	ASSEMBLY NUMBER
H220SAC	5/32"	–	.25"	Single Acting	0733-0001
H220SACG	5/32"	–	.25"	Single Acting, EPR Seals	0733-0006
H220SBC	1/4"	.094"	.34"	Single Acting	0733-0101
H220SBCG	1/4"	.094"	.34"	Single Acting, EPR Seals	0733-0102
H220SEC	1/2"	.344"	.59"	Single Acting	0733-0201
H220SECG	1/2"	.344"	.59"	Single Acting, EPR Seals	0733-0202

SINGLE ACTING WITH FLOATING BRACKET

FLOATING MOUNT - FIXED DISC

Accommodates disc thickness: 5/32" 1/4" 1/2"

Weight 4.5 lbs. 2.04 kgs.

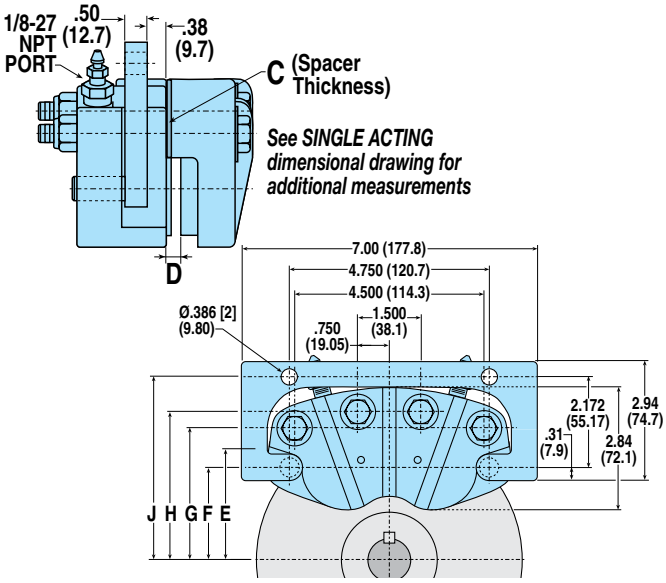

MODEL CODE	DISC THK.	C	D	OPTIONS / DESCRIPTION	ASSEMBLY NUMBER
H220SAFC	5/32"	–	.25"	Single Acting, Floating Bracket	0733-0021
H220SAFCG	5/32"	–	.25"	Sgl Act, Floating Bracket, EPR Seals	0733-0022
H220SBFC	1/4"	.094"	.34"	Sgl Act, Floating Bracket	0733-0121
H220SBFCG	1/4"	.094"	.34"	Sgl Act, Floating Bracket, EPR Seals	0733-0122
H220SEFC	1/2"	.344"	.59"	Sgl Act, Floating Bracket	0733-0221
H220SEFCG	1/2"	.344"	.59"	SglAct, Floating Bracket, EPR Seals	0733-0222

MOUNTING DIMENSIONS

Disc Diameter		6.313"	8"	10"	12"	16"
Braking Radius	E	2.36"	3.18"	4.14"	5.11"	7.17"
	F	2.11"	3.00"	4.00"	5.00"	7.09"
	G	3.05"	3.94"	4.94"	5.94"	8.03"
	H	3.42"	4.32"	5.32"	6.32"	8.41"
	J	4.28"	5.17"	6.17"	7.17"	9.26"

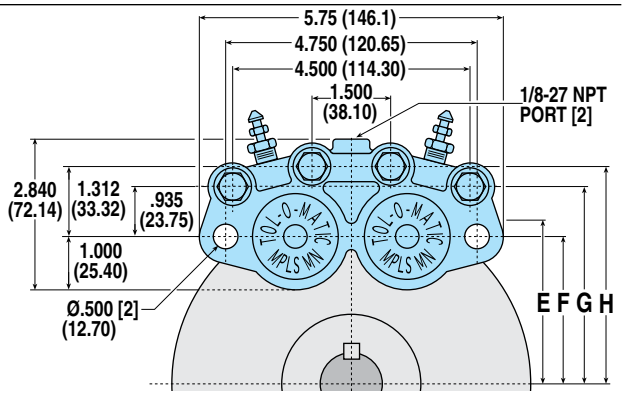

Caliper Disc Brakes

ORDER ONLINE

H220I SERIES - CAST IRON

AVAILABLE STYLES

Double Acting

FIXED MOUNT - FIXED DISC



PICTURED: 0735-0403

Single Acting

FIXED MOUNT - FLOATING DISC



PICTURED: 0733-0402

Single Acting with Floating Bracket

FLOATING MOUNT - FIXED DISC



PICTURED: 0733-0422

H220I SPECIFICATIONS

Maximum Pressure Rating:	1,500 PSI
Accommodates Tolomatic disc diameters:	6-5/16", 8", 10", 12", 16"
Maximum disc diameter:	16"
Housing Material:	Cast ductile iron
Bolts:	Zinc plated grade 8
Seals:	Buna-N Standard
Wearable friction material:	2.7 in^3
Friction material:	Replaceable, high-grade
Total lining area:	9.6 in^2
Piston diameter:	1.625 in.
Fluid displacement:	Single acting = 0.124 in^3 Double acting = 0.124 in^3

OPTIONS

Seals:	EPR seals
Floating bracket:	Available

PERFORMANCE DATA

Dynamic Torque vs Pressure

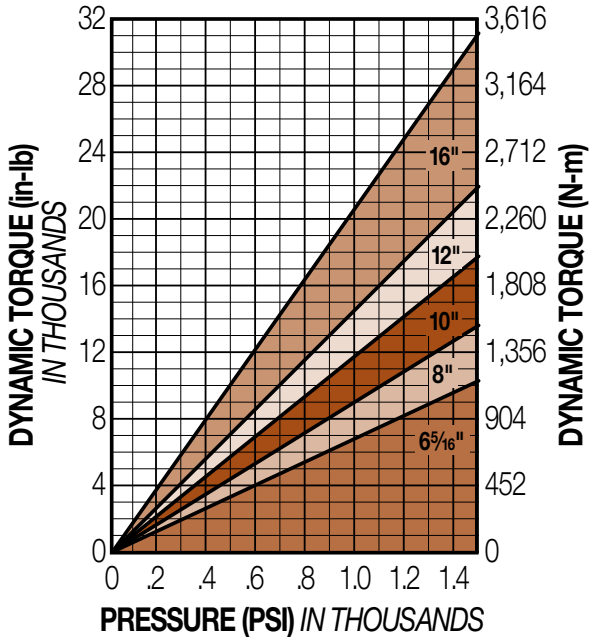

Static Torque vs Pressure

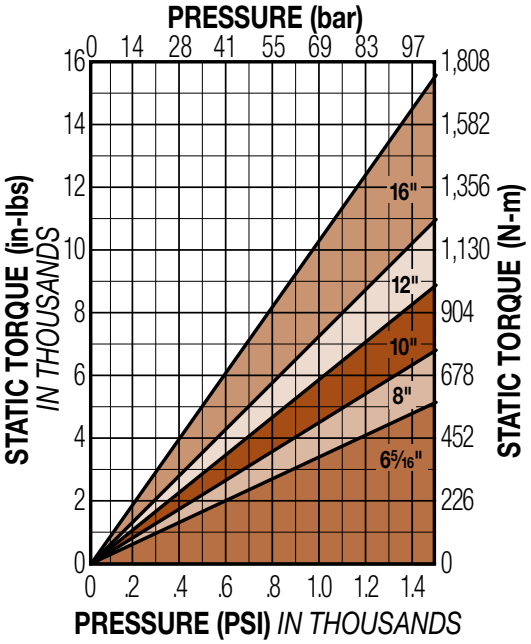

DISC SIZING EQUATIONS

DYNAMIC TORQUE (IN.-LBS.) = 2.88 x BRAKING RADIUS (IN.) x PRESSURE (PSI)
STATIC (PARKING) TORQUE (IN.-LBS.) = 1.44 x BRAKING RADIUS (IN.) x PRESSURE (PSI)
NOTE: Braking Radius values are listed under "Mounting Dimensions" on page 45

BRAKE MODEL LETTER CODES

A 5/32" Thick Disc	**E** 1/2" Thick Disc	**L** 3/8" Thick Disc
B 1/4" Thick Disc	**F** Floating Bracket Mount	**I** Iron
C With Bleeder Fitting	**G** EPR Seals	**O** 1-1/4" Thick Disc
D Double Acting	**H** Hydraulic Brake	**S** Single Acting

DOUBLE ACTING

FIXED MOUNT - FIXED DISC

Accommodates disc thickness: 5/32" 1/4" 3/8" 1/2"

Weight 12.0 lbs. 5.40 kgs.

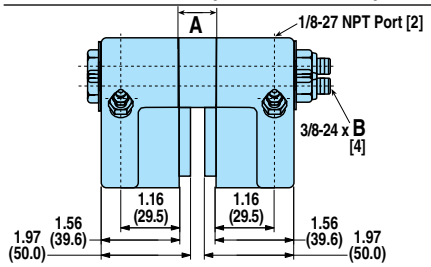

MODEL CODE	DISC THK.	A	B	OPTIONS / DESCRIPTION	ASSEMBLY NUMBER
H220DACI	5/32"	1.031"	5.00"	Double Acting, Cast Iron	0735-0403
H220DACIG	5/32"	1.031"	5.00"	Double Acting, Cast Iron, EPR Seals	0735-0407
H220DBCI	1/4"	1.125"	5.00"	Double Acting, Cast Iron	0735-0404
H220DBCIG	1/4"	1.125"	5.00"	Double Acting, Cast Iron, EPR Seals	0735-0408
H220DLCI	3/8"	1.250"	5.50"	Double Acting, Cast Iron	0735-0405
H220DLCIG	3/8"	1.250"	5.50"	Double Acting, Cast Iron, EPR Seals	0735-0409
H220DECI	1/2"	1.375"	6.00"	Double Acting, Cast Iron	0735-0406
H220DECIG	1/2"	1.375"	6.00"	Double Acting, Cast Iron, EPR Seals	0735-0410

SINGLE ACTING

FIXED MOUNT - FLOATING DISC

Accommodates disc thickness: 5/32" 1/4" 3/8" 1/2"

Weight 9.0 lbs. 4.08 kgs.

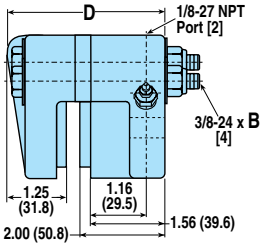

MODEL CODE	DISC THK.	B	D	OPTIONS / DESCRIPTION	ASSEMBLY NUMBER
H220SACI	5/32"	4.00"	3.45"	Single Acting, Cast Iron	0733-0402
H220SACIG	5/32"	4.00"	3.45"	Single Acting, Cast Iron, EPR Seals	0733-0406
H220SBCI	1/4"	4.00"	3.55"	Single Acting, Cast Iron	0733-0403
H220SBCIG	1/4"	4.00"	3.55"	Single Acting, Cast Iron, EPR Seals	0733-0407
H220SLCI	3/8"	4.00"	3.67"	Single Acting, Cast Iron	0733-0404
H220SLCIG	3/8"	4.00"	3.67"	Single Acting, Cast Iron, EPR Seals	0733-0408
H220SECI	1/2"	4.50"	3.79"	Single Acting, Cast Iron	0733-0405
H220SECIG	1/2"	4.50"	3.79"	Single Acting, Cast Iron, EPR Seals	0733-0409

SINGLE ACTING WITH FLOATING BRACKET

FLOATING MOUNT - FIXED DISC

Accommodates disc thickness: 5/32" 1/4" 3/8" 1/2"

Weight 10.5 lbs. 4.76 kgs.

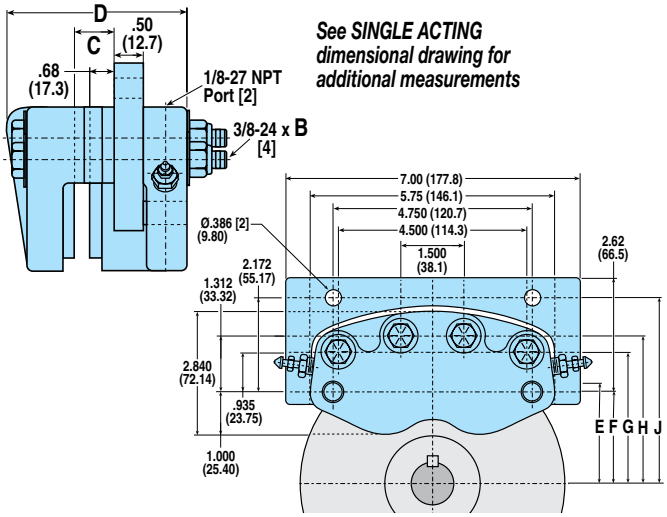

MODEL CODE	DISC THK.	B	C	D	OPTIONS / DESCRIPTION	ASSEMBLY NUMBER
H220SAFCI	5/32"	4.00"	.83"	3.45"	Sgl Act, Floating Bracket, Cast Iron	0733-0422
H220SAFCIG	5/32"	4.00"	.83"	3.45"	SglAct, Ftg Bkt, Iron, EPR Seals	0733-0426
H220SBFCI	1/4"	4.00"	.92"	3.55"	Sgl Act, Floating Bracket, Cast Iron	0733-0423
H220SBFCIG	1/4"	4.00"	.92"	3.55"	SglAct, Ftg Bkt, Iron, EPR Seals	0733-0427
H220SLFCI	3/8"	4.00"	1.05"	3.67"	Sgl Act, Floating Bracket, Cast Iron	0733-0424
H220SLFCIG	3/8"	4.00"	1.05"	3.67"	Sgl Act, Ftg Bkt, Iron, EPR Seals	0733-0428
H220SEFCI	1/2"	4.50"	1.17"	3.79"	Sgl Act, Floating Bracket, Cast Iron	0733-0425
H220SEFCIG	1/2"	4.50"	1.17"	3.79"	Sgl Act, Ftg Bkt, Iron, EPR Seals	0733-0429

MOUNTING DIMENSIONS

Disc Diameter		6.313"	8"	10"	12"	16"
Braking Radius	E	2.36"	3.18"	4.14"	5.11"	7.17"
	F	2.11"	3.00"	4.00"	5.00"	7.09"
	G	3.05"	3.94"	4.94"	5.94"	8.03"
	H	3.42"	4.32"	5.32"	6.32"	8.41"
	J	4.28"	5.17"	6.17"	7.17"	9.26"

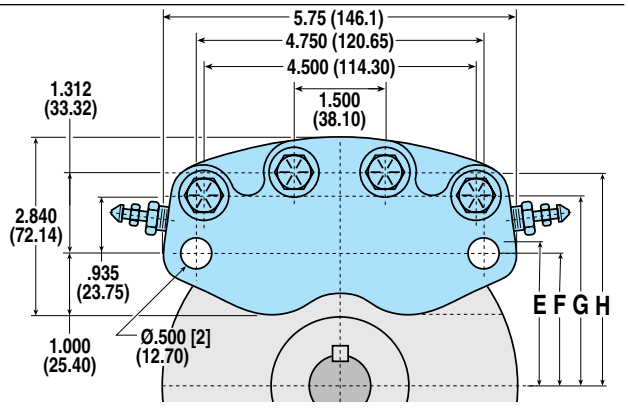

Caliper Disc Brakes

ORDER ONLINE

H441 SERIES - DUCTILE IRON

AVAILABLE STYLES

Double Acting

FIXED MOUNT - FIXED DISC



PICTURED: 0774-0000

H441 SPECIFICATIONS

Maximum Pressure Rating:	1,500 PSI
Accommodates Tolomatic disc diameters:	10", 12", 16"
Maximum disc diameter:	none
Housing Material:	Cast ductile iron
Bolts:	Zinc plated grade 5
Seals:	Buna-N Standard
Wearable friction material:	3.87 in^3
Metallic:	3.38 in^3
Friction material:	Replaceable, high-grade
Total lining area:	9.14 in^2
Metallic:	7.36 in^2
Piston diameter:	2.50 in.
Fluid displacement: for .03 inch clearance	Double acting = 0.147 in^3
OPTIONS	
Seals:	EPR seals

BRAKE MODEL LETTER CODES

D Double Acting	**G** EPR Seals	**H** Hydraulic Brake

PERFORMANCE DATA

Dynamic Torque vs Pressure

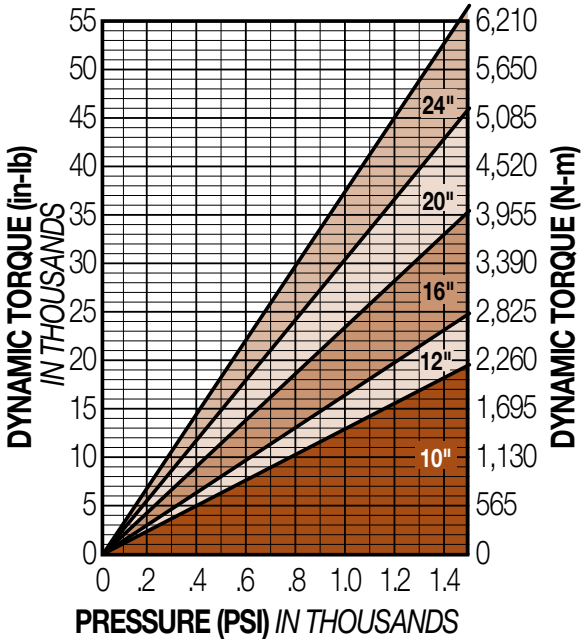

Static Torque vs Pressure

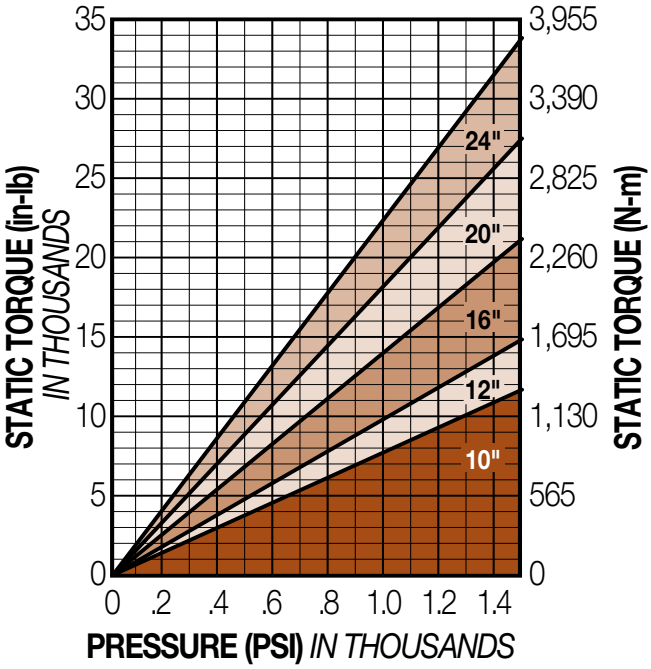

DISC SIZING EQUATIONS

DYNAMIC TORQUE (IN.-LBS.) = 3.53 x BRAKING RADIUS (IN.) x PRESSURE (PSI)
STATIC (PARKING) TORQUE (IN.-LBS.) = 2.11 x BRAKING RADIUS (IN.) x PRESSURE (PSI)
BRAKING RADIUS (IN.) = [DISC DIAMETER ÷ 2] - 1.31

NOTE: Braking Radius values are listed under "Mounting Dimensions" on page 47

H441 SERIES - DUCTILE IRON

DOUBLE ACTING

FIXED MOUNT - FIXED DISC

Accommodates disc thickness:	N/A	
Weight	17.0 lbs.	7.71 kgs.

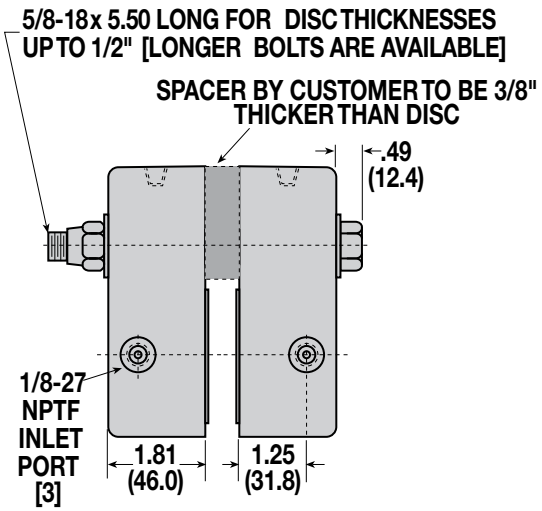

MODEL CODE	DISC THK.	OPTIONS / DESCRIPTION	ASSEMBLY NUMBER
H441D	N/A	Double Acting	0774-0000
H441DG	N/A	Double Acting, EPR Seals	0774-0001

MOUNTING DIMENSIONS

Disc Diameter		10"	12"	16"	20"	24"
	A	5.69"	6.69"	8.69"	10.69"	12.69"
Braking Radius	B	3.69"	4.69"	6.69"	8.69"	10.69"

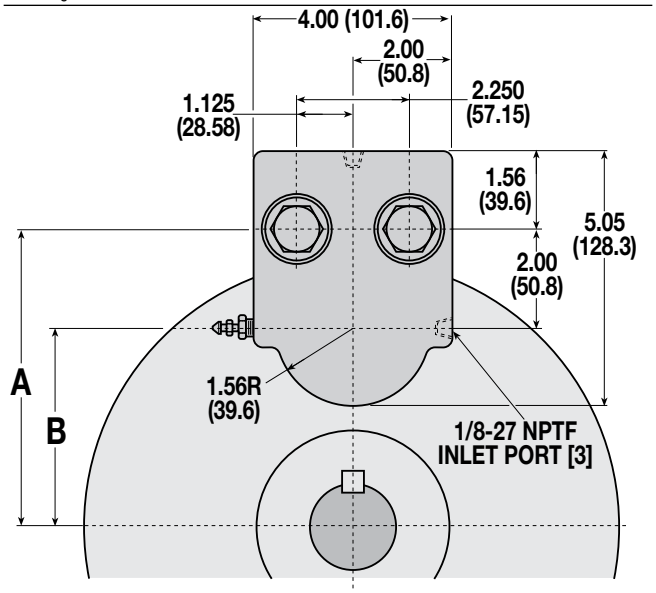

Caliper Disc Brakes

ORDER ONLINE

H960 SERIES - DUCTILE IRON

AVAILABLE STYLES

Double Acting

FIXED MOUNT - FIXED DISC



PICTURED: 0778-0003

H960 SPECIFICATIONS

Maximum Pressure Rating:	1,500 PSI (intermittent duty) 1,000 PSI (continuous duty)
Accommodates Tolomatic disc diameters:	12", 16"
Maximum disc diameter:	18"
Housing Material:	Cast ductile iron
Bolts:	Zinc plated grade 5
Seals:	Buna-N Standard
Wearable friction material:	9.9 in^3
Friction material:	Replaceable, high-grade
Total lining area:	32.0 in^2
Piston diameter:	3.50 in.
Fluid displacement:	Double acting = 0.576 in^3
OPTIONS	
Seals:	EPR seals
Seals:	Viton® seals

BRAKE MODEL LETTER CODES

C With Bleeder Fitting	**H** Hydraulic Brake	**V** Viton® Seals
D Double Acting	**I** Iron	**X** Non-standard Disc Thickness
E 1/2" Thick Disc	**N** 1" Thick Disc	
G EPR Seals	**T** .188" Thick Disc	

PERFORMANCE DATA

Dynamic Torque vs Pressure

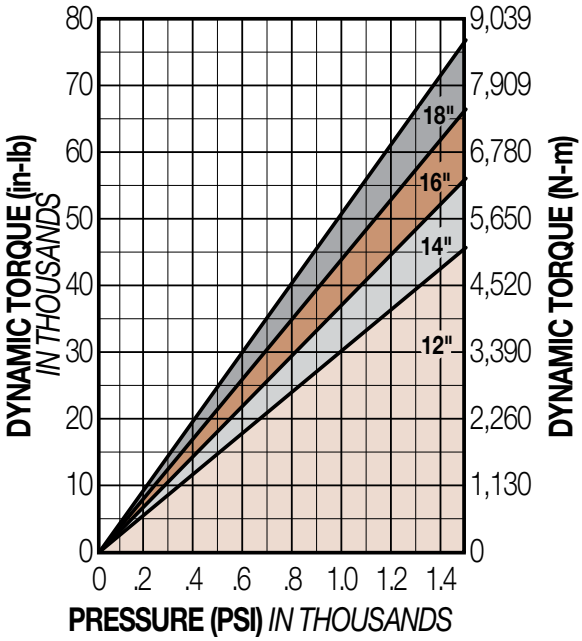

Static Torque vs Pressure

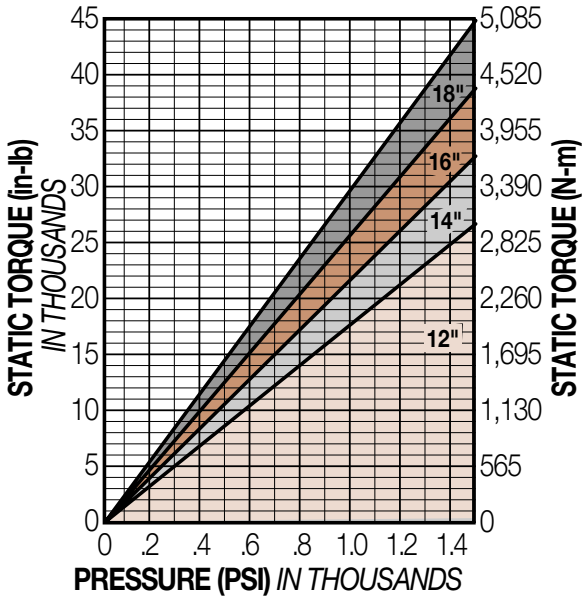

DISC SIZING EQUATIONS

DYNAMIC TORQUE (IN.-LBS.) = 6.92 x BRAKING RADIUS (IN.) x PRESSURE (PSI)
STATIC (PARKING) TORQUE (IN.-LBS.) = 4.04 x BRAKING RADIUS (IN.) x PRESSURE (PSI)
BRAKING RADIUS (IN.) = [DISC DIAMETER ÷ 2] - 1.60

NOTE: Braking Radius values are listed under "Mounting Dimensions" on page 49

DOUBLE ACTING

FIXED MOUNT - FIXED DISC

Accommodates disc thickness:	3/16"	1/2"	1"	1-1/8"
Weight	35.0 lbs.		15.88 kgs.	

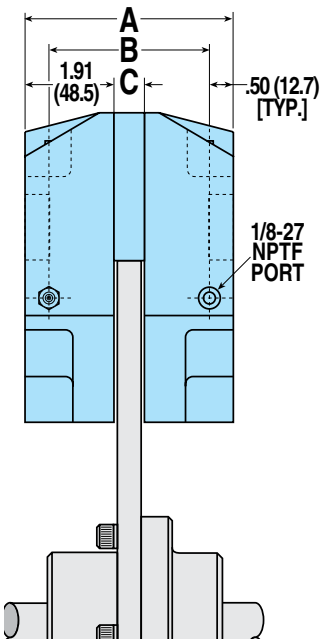

MOUNTING DIMENSIONS

Disc Diameter		12"	14"	16"	18"
	D	6.712"	7.712"	8.712"	9.712"
Braking Radius	E	4.40"	5.40"	6.40"	7.40"

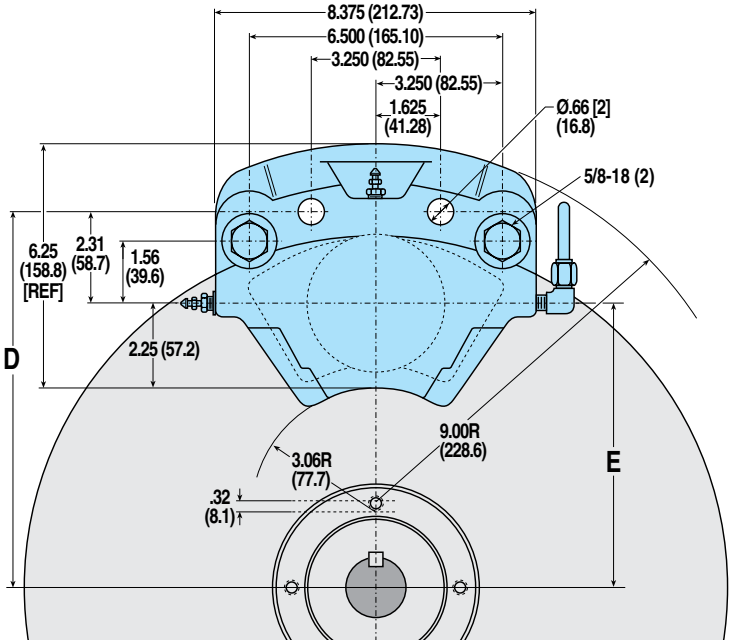

MODEL CODE	DISC THK.	A	B	C	OPTIONS / DESCRIPTION	ASSEMBLY NUMBER
H960DTCI	3/16"	4.13"	3.13"	.31"	Double Acting, Iron	0778-0012
H960DECI	1/2"	4.45"	3.45"	.63"	Double Acting, Iron	0778-0003
H960DECIG	1/2"	4.45"	3.45"	.63"	Double Acting, Iron, EPR Seals	0778-0004
H960DECIV	1/2"	4.45"	3.45"	.63"	Double Acting, Iron, Viton® Seals	0778-0005
H960DNCI	1"	4.95"	3.95"	1.13"	Double Acting, Iron	0778-0011
H960DXCI	1-1/8"	5.08"	4.08"	1.26"	Double Acting, Iron	0778-0000

Viton® is a registered trademark of the E.I. Du Pont de Newmours Co., www.dupont.com

Caliper Disc Brakes

ORDER ONLINE

H/ME220 SERIES - ALUMINUM

AVAILABLE STYLES

Single Acting with Float Pin Holes

FIXED MOUNT - FLOATING DISC or FLOATING MOUNT - FIXED DISC



PICTURED: 0744-0630

H/ME220 SPECIFICATIONS

Maximum Hydraulic Pressure Rating:	1,500 PSI
Maximum lever force:	580 Lbs.
Accommodates Tolomatic disc diameters:	6-5/16", 8", 10", 12", 16"
Maximum disc diameter:	16"
Housing Material:	Cast aluminum
Bolts:	Zinc plated grade 8
Seals:	EPR Standard
Wearable friction material:	1.6 in^3
Friction material:	Replaceable, high-grade
Total lining area:	7.5 in^2
Piston diameter:	1.625 in.
Fluid displacement:	Single acting = 0.124 in^3

CAM TRAVEL DATA

1. Gap between lining faces and disc when new = .048" total.
2. Angular movement required to actuate brake when new = 7° 30".
3. Maximum axial movement without intermediate adjustment = .387".
4. Wear allowed before adjustment .104" each side.

DISC SIZING EQUATIONS

HYDRAULIC:

DYNAMIC TORQUE (IN.-LBS.) = 2.88 x BRAKING RADIUS (IN.) x PRESSURE (PSI)

STATIC (PARKING) TORQUE (IN.-LBS.) = 1.44 x BRAKING RADIUS (IN.) x PRESSURE (PSI)

MECHANICAL:

DYNAMIC TORQUE (IN.-LBS.) = 7.45 x BRAKING RADIUS (IN.) x LEVER FORCE (LBS.)

STATIC (PARKING) TORQUE (IN.-LBS.) = 3.725 x BRAKING RADIUS (IN.) x LEVER FORCE (LBS.)

NOTE: Braking Radius values are listed under "Mounting Dimensions" on page 51

PERFORMANCE DATA

Hydraulic - Dynamic Torque vs Pressure

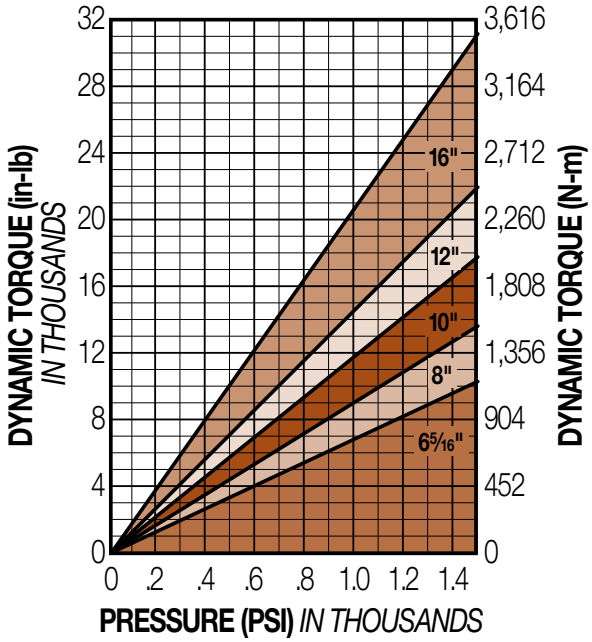

Hydraulic - Static Torque vs Pressure

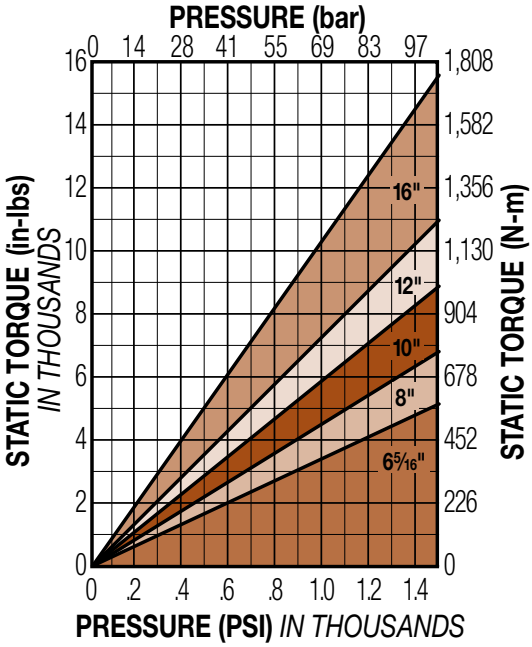

PERFORMANCE DATA

Mechanical - Dynamic Torque vs Lever Force

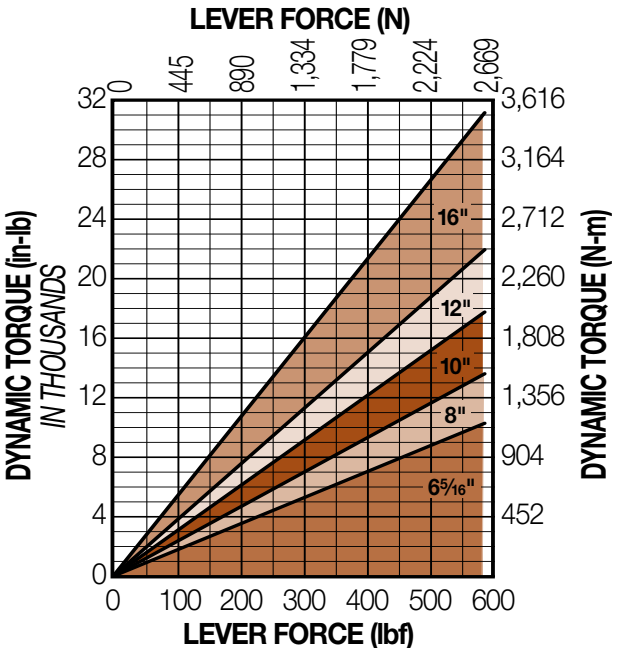

Mechanical - Static Torque vs Lever Force

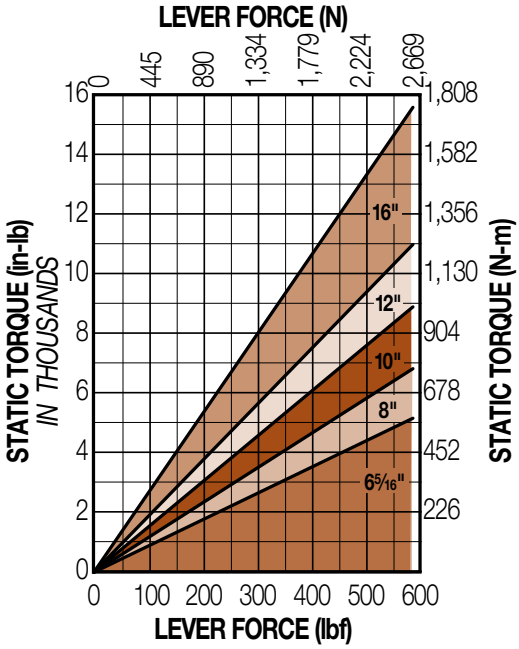

BRAKE MODEL LETTER CODES

A 5/32" Thick Disc	**E** 1/2" Thick Disc	**L** 3/8" Thick Disc
B 1/4" Thick Disc	**G** EPR Seals	**ME** Mechanical Brake
C With Bleeder Fitting	**H** Hydraulic Brake	**S** Single Acting

SINGLE ACTING WITH FLOAT PIN HOLES

FIXED MOUNT - FLOATING DISC or FLOATING MOUNT - FIXED DISC

Accommodates disc thickness: 5/32" 1/4" 3/8" 1/2"

Weight 6.00 lbs. 2.72 kgs.

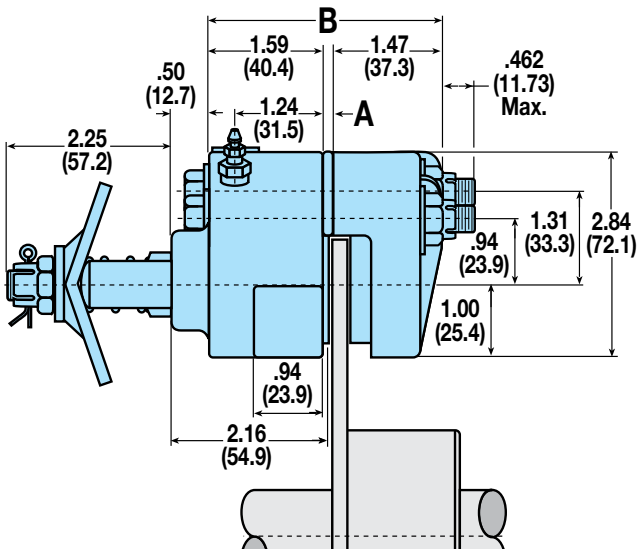

MODEL CODE	DISC THK.	A	B	OPTIONS / DESCRIPTION	ASSEMBLY NUMBER
H/ME220SACG	5/32"	.084"	3.144"	Hyd./Mech. Brake	0744-0630
H/ME220SBCG	1/4"	.178"	3.238"	Hyd./Mech. Brake	0744-0640
H/ME220SLCG	3/8"	.303"	3.363"	Hyd./Mech. Brake	0744-0650
H/ME220SECG	1/2"	.428"	3.488"	Hyd./Mech. Brake	0744-0660

MOUNTING DIMENSIONS

Disc Diameter		6.313"	8"	10"	12"	16"
	C	1.60"	2.47"	3.47"	4.47"	6.56"
Braking Radius		2.35"	3.15"	4.11"	5.08"	7.14"

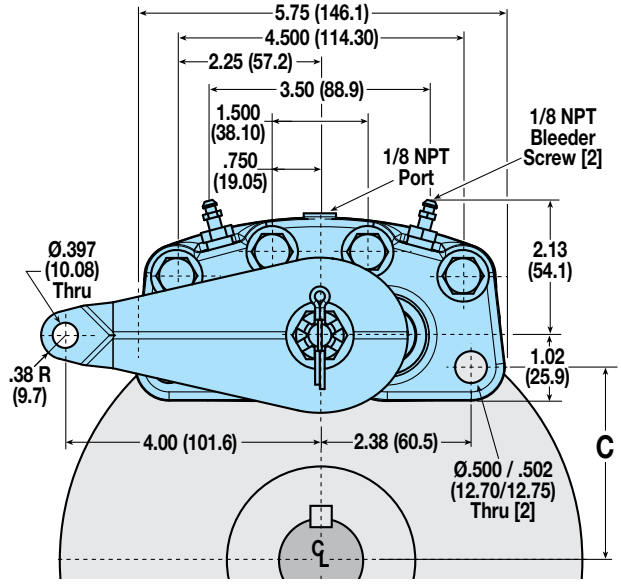

Caliper Disc Brakes

ORDER ONLINE

ME10 SERIES - ALUMINUM

AVAILABLE STYLES

"L" Long Lever (3.50") Single Acting

FIXED MOUNT - FLOATING DISC



PICTURED: 0732-0003

"L" Long Lever (3.50") Single Acting with Floating Bracket

FLOATING MOUNT - FIXED DISC



PICTURED: 0732-0002

"M" Machined Cam Lever (1.75") Single Acting

FIXED MOUNT - FLOATING DISC



PICTURED: 0707-0000

"M" Machined Cam Lever (1.75") Single Acting with Floating Bracket

FLOATING MOUNT - FIXED DISC



PICTURED: 0707-0001

"S" Short Lever (1.75") Single Acting

FIXED MOUNT - FLOATING DISC



PICTURED: 0732-0000

"S" Short Lever (1.75") Single Acting with Floating Bracket

FLOATING MOUNT - FIXED DISC



PICTURED: 0732-0001

ME10 SPECIFICATIONS

Maximum lever force "L" Long Lever:	225 Lbs.
Maximum lever force "M" & "S" Levers:	450 Lbs.
Accommodates Tolomatic disc diameters:	6-5/16", 8", 10", 12", 16"
Maximum disc diameter:	none
Housing Material:	Cast aluminum
Bolts:	Zinc plated grade 5
Wearable friction material:	0.47 in^3
Friction material:	Replaceable, high-grade
Total lining area:	1.84 in^2
Lever / Cam:	Heat treated one-piece lever/cam or machined "V" notch cam
OPTIONS	
Floating bracket:	Stamped steel construction with zinc plated steel bushings
Additional lever positions:	Consult factory

MOUNTING DIMENSIONS

Disc Diameter		6.313"	8"	10"	12"	16"
	C	3.469"	4.312"	5.312"	6.312"	8.312"
Braking Radius	D	2.532"	3.376"	4.376"	5.376"	7.376"

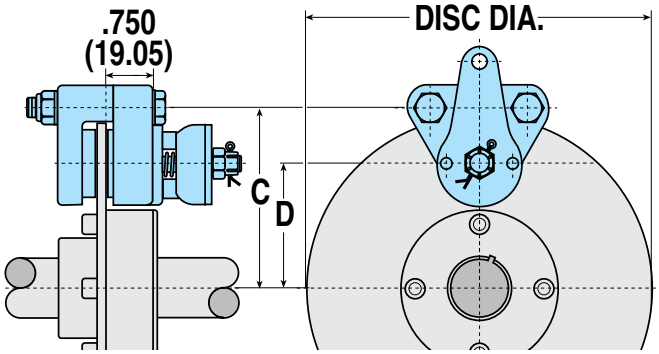

DISC SIZING EQUATIONS

"L" LONG LEVER (3.50"):

DYNAMIC TORQUE (IN.-LBS.) = 5.38 x BRAKING RADIUS (IN.) x LEVER FORCE (LBS.)

STATIC (PARKING) TORQUE (IN.-LBS.) = 2.69 x BRAKING RADIUS (IN.) x LEVER FORCE (LBS.)

"M" MACHINED CAM (1.75") & "S" SHORT LEVER (1.75"):

DYNAMIC TORQUE (IN.-LBS.) = 2.69 x BRAKING RADIUS (IN.) x LEVER FORCE (LBS.)

STATIC (PARKING) TORQUE (IN.-LBS.) = 1.345 x BRAKING RADIUS (IN.) x LEVER FORCE (LBS.)

BRAKING RADIUS (IN.) = [DISC DIAMETER ÷ 2] - 0.624

NOTE: Braking Radius values are listed under "Mounting Dimensions" above

CAM TRAVEL DATA

1. 15° maximum travel when linings are new and with 1/32" gap each side of disc.
2. Periodic tightening of lock nut will reduce travel of lever and will allow 1/4" wear on each lining.
3. 90° maximum travel after 3/16" wear on each lining without intermediate tightening of lock nut.

PERFORMANCE DATA

Dynamic Torque vs Lever Force

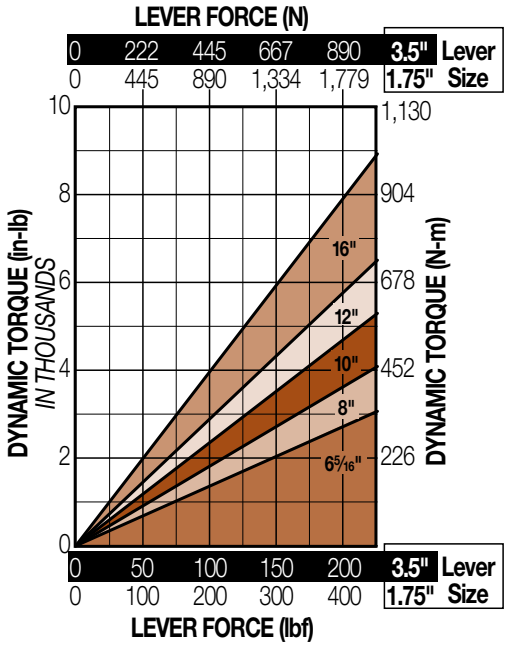

Static Torque vs Lever Force

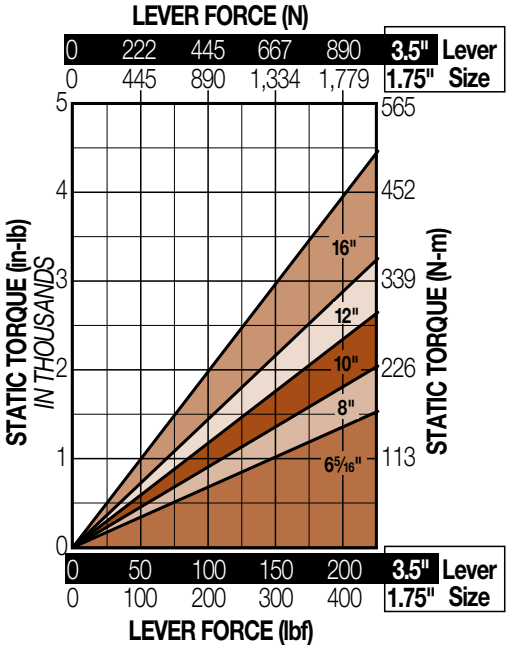

"L" LONG LEVER - SINGLE ACTING

FIXED MOUNT - FLOATING DISC

Accommodates disc thickness: 5/32"

Weight .75 lbs. .34 kgs.

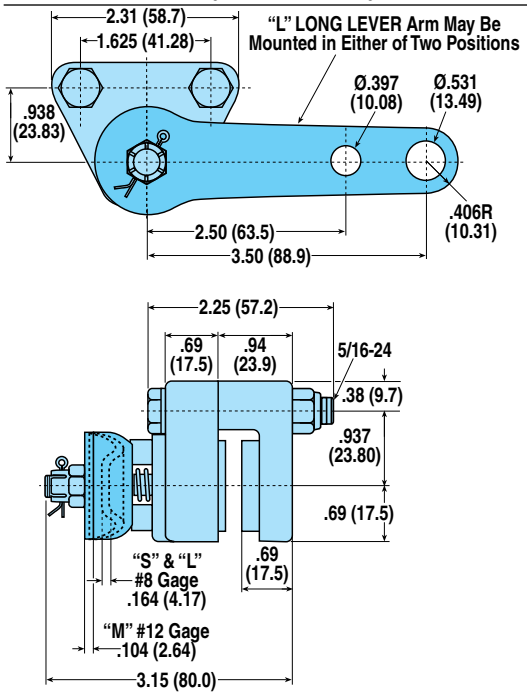

MODEL CODE	DISC THK.	OPTIONS / DESCRIPTION	ASSEMBLY NUMBER
ME10LA	5/32"	Long Lever	0732-0003

"L" LONG LEVER - SINGLE ACTING WITH FLOATING BRACKET

FLOATING MOUNT - FIXED DISC

Accommodates disc thickness: 5/32" 1/4"

Weight 1.25 lbs. .56 kgs.

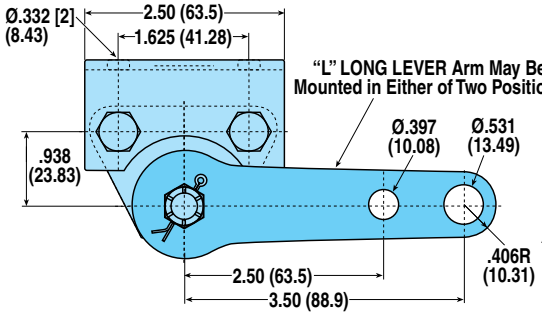

See "S" SHORT LEVER SINGLE ACTING WITH FLOATING BRACKET dimensional drawing for additional measurements

MODEL CODE	DISC THK.	A	B	OPTIONS / DESCRIPTION	ASSEMBLY NUMBER
ME10LAF	5/32"	–	3.15"	Long Lever, Floating Bracket	0732-0002
ME10LBF	1/4"	.094"	3.24"	Long Lever, Floating Bracket	0732-0004

BRAKE MODEL LETTER CODES

A 5/32" Thick Disc	**L** Long Lever (ME Brakes)	**ME** Mechanical Brake
B 1/4" Thick Disc	**M** Machined Cam (ME Brakes)	**S** Short Lever (ME Brakes)
F Floating Bracket Mount		

Caliper Disc Brakes

ORDER ONLINE

ME10 SERIES - ALUMINUM

"M" MACHINED CAM - SINGLE ACTING

FIXED MOUNT - FLOATING DISC

Accommodates disc thickness: 5/32"

Weight .75 lbs. .34 kgs.

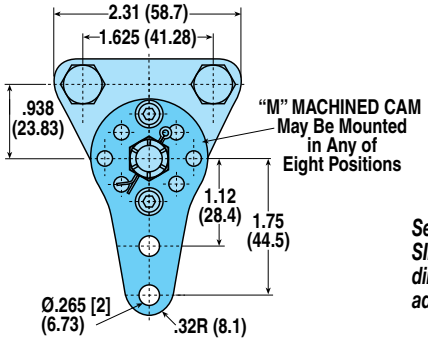

See "S" SHORT LEVER SINGLE ACTING dimensional drawing for additional measurements

MODEL CODE	DISC THK.	OPTIONS / DESCRIPTION	ASSEMBLY NUMBER
ME10MA	5/32"	Machined Cam	0707-0000

"S" SHORT LEVER - SINGLE ACTING

FIXED MOUNT - FLOATING DISC

Accommodates disc thickness: 5/32"

Weight .75 lbs. .34 kgs.

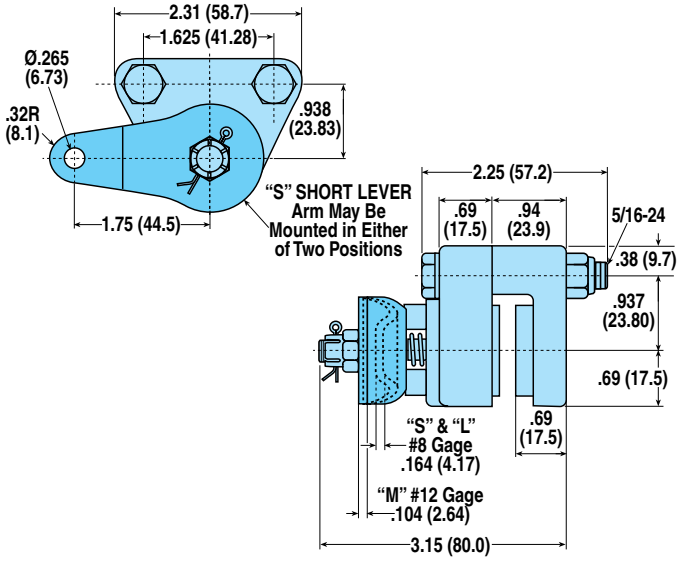

MODEL CODE	DISC THK.	OPTIONS / DESCRIPTION	ASSEMBLY NUMBER
ME10SA	5/32"	Short Lever	0732-0000

"M" MACHINED CAM - SINGLE ACTING WITH FLOATING BRACKET

FLOATING MOUNT - FIXED DISC

Accommodates disc thickness: 5/32"

Weight 1.50 lbs. .68 kgs.

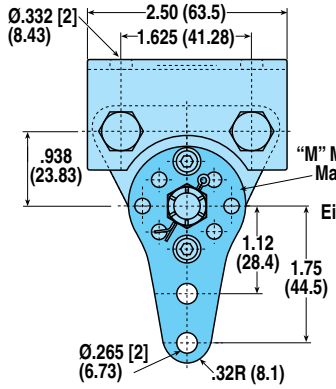

See "S" SHORT LEVER SINGLE ACTING WITH FLOATING BRACKET dimensional drawing for additional measurements

MODEL CODE	DISC THK.	A	B	OPTIONS / DESCRIPTION	ASSEMBLY NUMBER
ME10MAF	5/32"	–	3.15"	Machined Cam, Floating Bracket	0707-0001

"S" SHORT LEVER - SINGLE ACTING WITH FLOATING BRACKET

FLOATING MOUNT - FIXED DISC

Accommodates disc thickness: 5/32" 1/4"

Weight 1.25 lbs. .56 kgs.

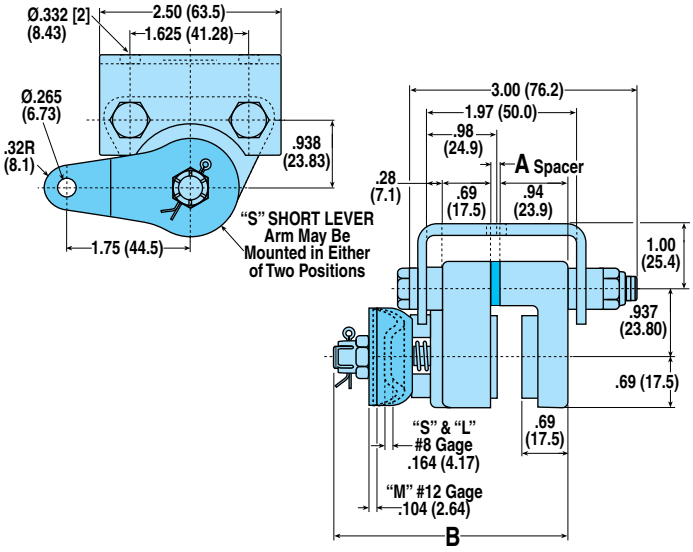

MODEL CODE	DISC THK.	A	B	OPTIONS / DESCRIPTION	ASSEMBLY NUMBER
ME10SAF	5/32"	–	3.15"	Short Lever, Floating Bracket	0732-0001
ME10SBF	1/4"	.094"	3.24"	Short Lever, Floating Bracket	0732-0005

Caliper Disc Brakes ORDER ONLINE

ME20 SERIES - ALUMINUM

AVAILABLE STYLES

"L" Long Lever (3.50") Single Acting

FIXED MOUNT - FLOATING DISC



PICTURED: 0731-0003

"L" Long Lever (3.50") Single Acting with Floating Bracket

FLOATING MOUNT - FIXED DISC



PICTURED: 0731-0002

"M" Machined Cam Lever (1.75") Single Acting

FIXED MOUNT - FLOATING DISC



PICTURED: 0726-0000

"M" Machined Cam Lever (1.75") Single Acting with Floating Bracket

FLOATING MOUNT - FIXED DISC



PICTURED: 0726-0001

"S" Short Lever (1.75") Single Acting

FIXED MOUNT - FLOATING DISC



PICTURED: 0731-0000

"S" Short Lever (1.75") Single Acting with Floating Bracket

FLOATING MOUNT - FIXED DISC



PICTURED: 0731-0001

ME20 SPECIFICATIONS

Maximum lever force "L" Long Lever:	225 Lbs.
Maximum lever force "M" & "S" Levers:	450 Lbs.
Accommodates Tolomatic disc diameters:	6-5/16", 8", 10", 12", 16"
Maximum disc diameter:	none
Housing Material:	Cast aluminum
Bolts:	Zinc plated grade 5
Wearable friction material:	0.8 in^3
Friction material:	Replaceable, high-grade
Total lining area:	3.75 in^2
Lever / Cam:	Heat treated one-piece lever/cam or machined "V" notch cam
OPTIONS	
Floating bracket:	Stamped steel construction with zinc plated steel bushings
Additional lever positions:	Consult factory

MOUNTING DIMENSIONS

Disc Diameter		6.313"	8"	10"	12"	16"
	C	3.531"	4.375"	5.375"	6.375"	8.375"
Braking Radius	D	2.281"	3.125"	4.125"	5.125"	7.125"

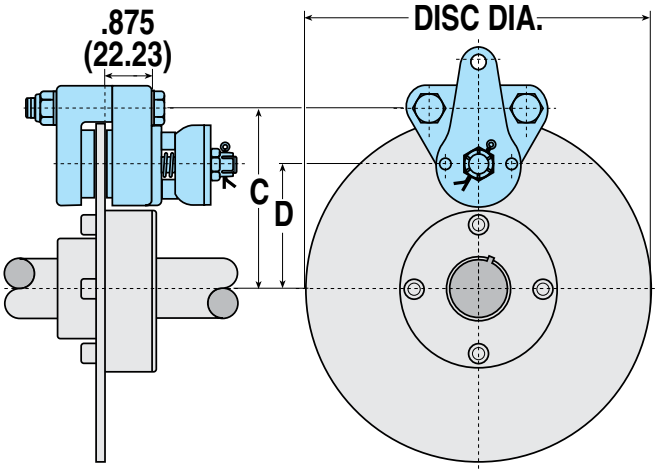

DISC SIZING EQUATIONS

"L" LONG LEVER (3.50"):

DYNAMIC TORQUE (IN.-LBS.) = 5.38 x BRAKING RADIUS (IN.) x LEVER FORCE (LBS.)

STATIC (PARKING) TORQUE (IN.-LBS.) = 2.69 x BRAKING RADIUS (IN.) x LEVER FORCE (LBS.)

"M" MACHINED CAM (1.75") & "S" SHORT LEVER (1.75"):

DYNAMIC TORQUE (IN.-LBS.) = 2.69 x BRAKING RADIUS (IN.) x LEVER FORCE (LBS.)

STATIC (PARKING) TORQUE (IN.-LBS.) = 1.345 x BRAKING RADIUS (IN.) x LEVER FORCE (LBS.)

BRAKING RADIUS (IN.) = [DISC DIAMETER ÷ 2] - 0.875

NOTE: Braking Radius values are listed under "Mounting Dimensions" above

CAM TRAVEL DATA

1. 15° maximum travel when linings are new and with 1/32" gap each side of disc.
2. Periodic tightening of lock nut will reduce travel of lever and will allow 1/4" wear on each lining.
3. 90° maximum travel after 3/16" wear on each lining without intermediate tightening of lock nut.

Caliper Disc Brakes

ORDER ONLINE

ME20 SERIES - ALUMINUM

PERFORMANCE DATA

Dynamic Torque vs Lever Force

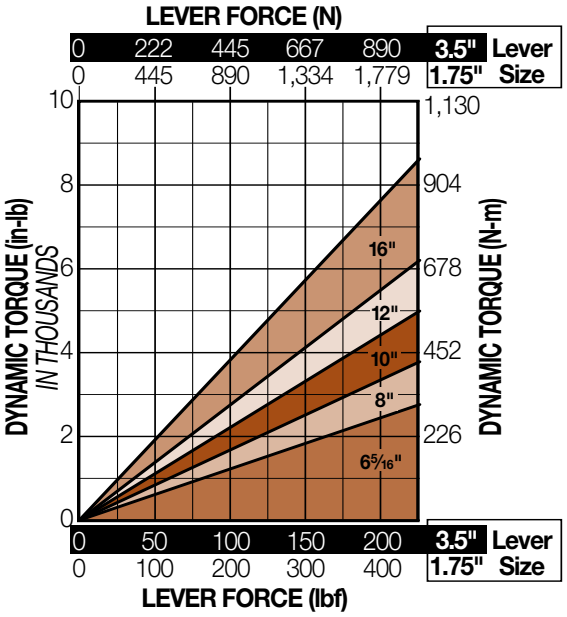

Static Torque vs Lever Force

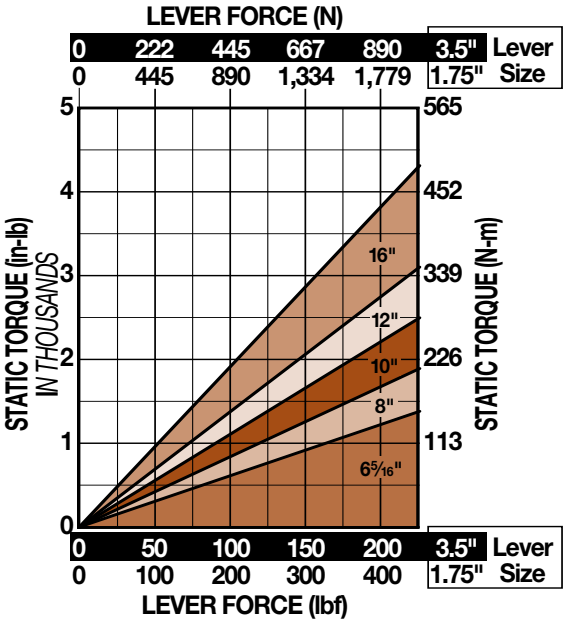

BRAKE MODEL LETTER CODES

A 5/32" Thick Disc	**L** Long Lever (ME Brakes)	**ME** Mechanical Brake
B 1/4" Thick Disc	**M** Machined Cam (ME Brakes)	**S** Short Lever (ME Brakes)
F Floating Bracket Mount		

"L" LONG LEVER - SINGLE ACTING

FIXED MOUNT - FLOATING DISC

Accommodates disc thickness: 5/32" 1/4"

Weight 1.50 lbs. .68 kgs.

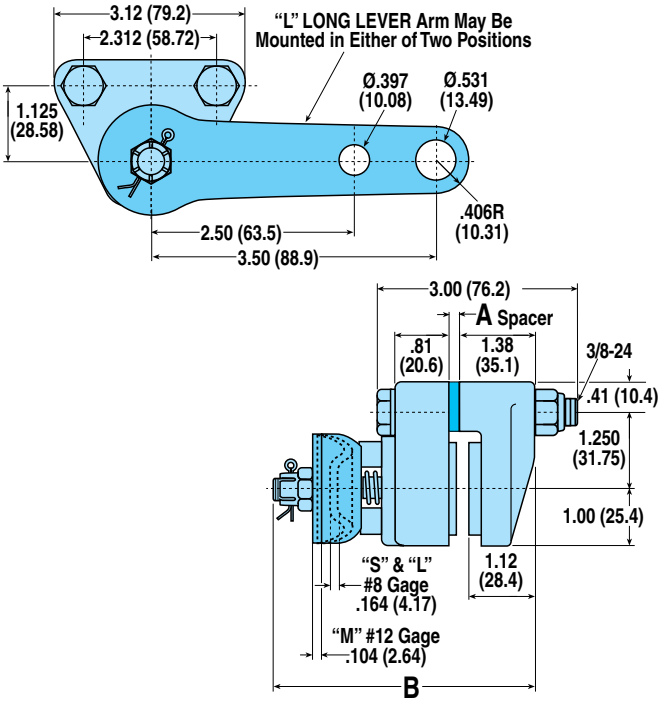

MODEL CODE	DISC THK.	A	B	OPTIONS / DESCRIPTION	ASSEMBLY NUMBER
ME20LA	5/32"	–	3.63"	Long Lever	0731-0003
ME20LB	1/4"	.094"	3.73"	Long Lever	0731-0005

"L" LONG LEVER - SINGLE ACTING WITH FLOATING BRACKET

FLOATING MOUNT - FIXED DISC

Accommodates disc thickness: 5/32" 1/4"

Weight 2.25 lbs. 1.02 kgs.

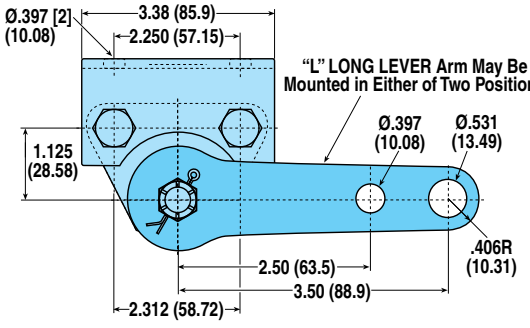

See "S" SHORT LEVER SINGLE ACTING WITH FLOATING BRACKET dimensional drawing for additional measurements

MODEL CODE	DISC THK.	A	B	OPTIONS / DESCRIPTION	ASSEMBLY NUMBER
ME20LAF	5/32"	–	3.63"	Long Lever, Floating Bracket	0731-0002
ME20LBF	1/4"	.094"	3.73"	Long Lever, Floating Bracket	0731-0006

"M" MACHINED CAM - SINGLE ACTING

FIXED MOUNT - FLOATING DISC

Accommodates disc thickness: 5/32" 1/4"

Weight 1.50 lbs. .68 kgs.

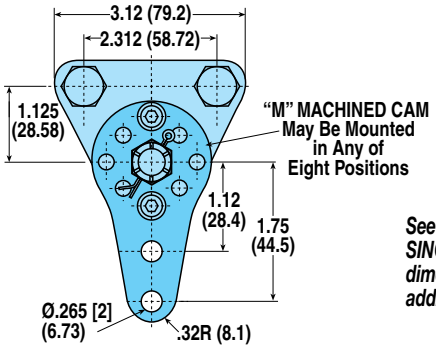

See "S" SHORT LEVER SINGLE ACTING dimensional drawing for additional measurements

MODEL CODE	DISC THK.	A	B	OPTIONS / DESCRIPTION	ASSEMBLY NUMBER
ME20MA	5/32"	–	3.63"	Machined Cam	0726-0000
ME20MB	1/4"	.094"	3.73"	Machined Cam	0726-0002

"M" MACHINED CAM - SINGLE ACTING WITH FLOATING BRACKET

FLOATING MOUNT - FIXED DISC

Accommodates disc thickness: 5/32" 1/4"

Weight 2.25 lbs. 1.02 kgs.

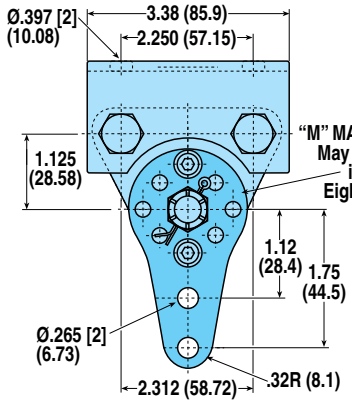

See "S" SHORT LEVER SINGLE ACTING WITH FLOATING BRACKET dimensional drawing for additional measurements

MODEL CODE	DISC THK.	A	B	OPTIONS / DESCRIPTION	ASSEMBLY NUMBER
ME20MAF	5/32"	–	3.63"	Machined Cam, Floating Bracket	0726-0001
ME20MBF	1/4"	.094"	3.73"	Machined Cam, Floating Bracket	0726-0003

"S" SHORT LEVER - SINGLE ACTING

FIXED MOUNT - FLOATING DISC

Accommodates disc thickness: 5/32" 1/4"

Weight 1.50 lbs. .68 kgs.

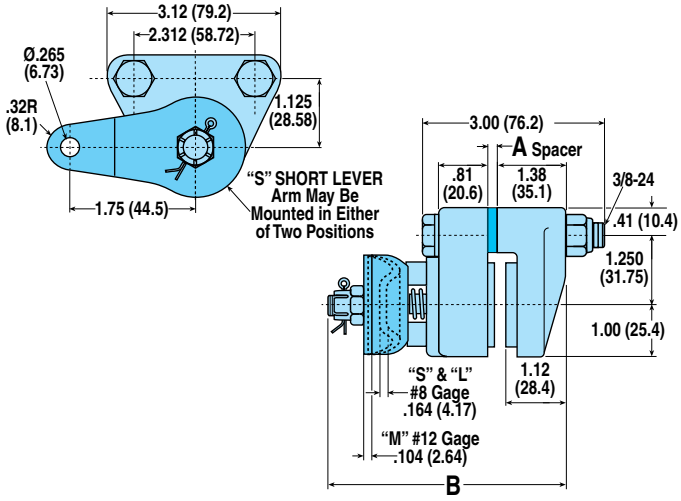

MODEL CODE	DISC THK.	A	B	OPTIONS / DESCRIPTION	ASSEMBLY NUMBER
ME20SA	5/32"	–	3.63"	Short Lever	0731-0000
ME20SB	1/4"	.094"	3.73"	Short Lever	0731-0007

"S" SHORT LEVER - SINGLE ACTING WITH FLOATING BRACKET

FLOATING MOUNT - FIXED DISC

Accommodates disc thickness: 5/32" 1/4"

Weight 2.25 lbs. 1.02 kgs.

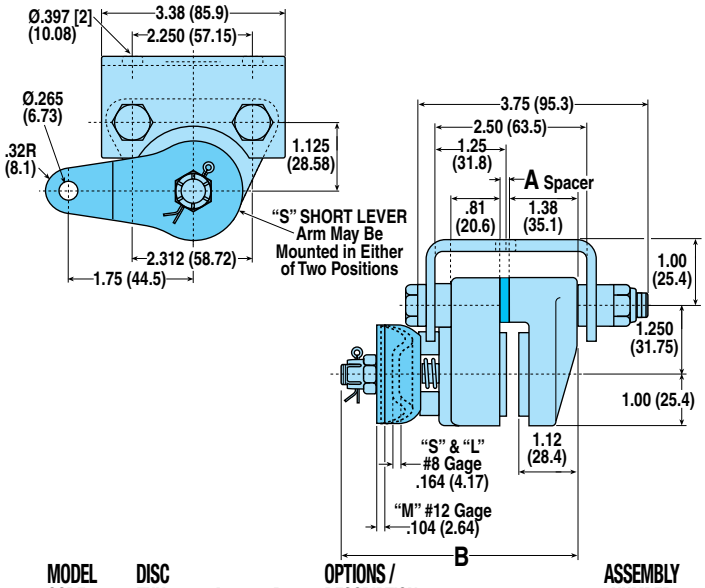

MODEL CODE	DISC THK.	A	B	OPTIONS / DESCRIPTION	ASSEMBLY NUMBER
ME20SAF	5/32"	–	3.63"	Short Lever, Floating Bracket	0731-0001
ME20SBF	1/4"	.094"	3.73"	Short Lever, Floating Bracket	0731-0004

Caliper Disc Brakes

ORDER ONLINE

ME220 SERIES - ALUMINUM OR CAST IRON

AVAILABLE STYLES

Aluminum Single Acting

FIXED MOUNT - FLOATING DISC



PICTURED: 0745-0000

Aluminum Single Acting with Floating Bracket

FLOATING MOUNT - FIXED DISC



PICTURED: 0745-0001

Cast Iron Single Acting

FIXED MOUNT - FLOATING DISC



PICTURED: 0745-0002

Cast Iron Single Acting with Floating Bracket

FLOATING MOUNT - FIXED DISC



PICTURED: 0745-0003

ME220 SPECIFICATIONS

Maximum lever force Aluminum Housing:	580 Lbs.
Maximum lever force Cast Iron Housing:	660 Lbs.
Accommodates Tolomatic disc diameters:	6-5/16", 8", 10", 12", 16"
Maximum disc diameter:	16"
Housing Material:	Cast aluminum or Cast ductile iron
Bolts:	Zinc plated grade 8
Wearable friction material:	1.6 in^3
Friction material:	Replaceable, high-grade
Total lining area:	7.5 in^2
Lever / Cam:	Heat treated one-piece lever/cam or machine "V" notch cam
Lining Wear Adjustment:	One step procedure
OPTIONS	
Floating bracket:	Available

CAM TRAVEL DATA

1. Gap between lining faces and disc when new = .048" total.
2. Angular movement required to actuate brake when new = 7° 30".
3. Maximum axial movement without intermediate adjustment = .387".
4. Wear allowed before adjustment .104" each side.

DISC SIZING EQUATIONS

DYNAMIC TORQUE (IN.-LBS.) = 7.45 x BRAKING RADIUS (IN.) x LEVER FORCE (LBS.)
STATIC (PARKING) TORQUE (IN.-LBS.) = 3.725 x BRAKING RADIUS (IN.) x LEVER FORCE (LBS.)
NOTE: Braking Radius values are listed under "Mounting Dimensions" on page 59

PERFORMANCE DATA

Dynamic Torque vs Lever Force

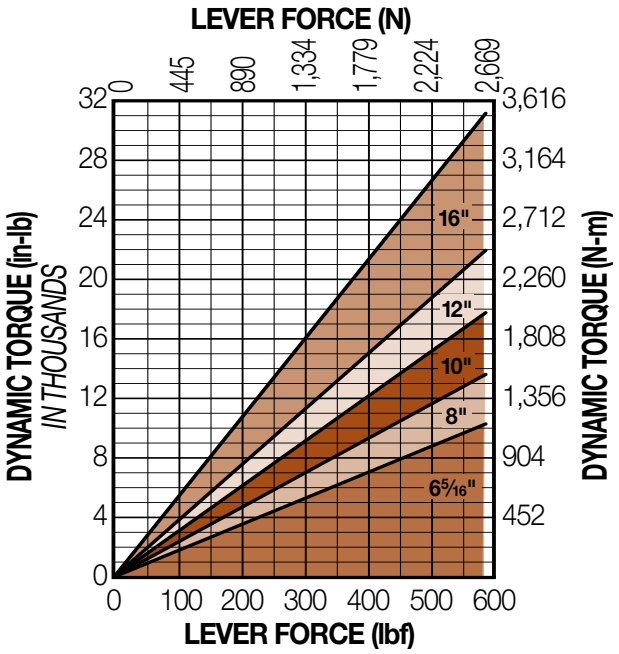

Static Torque vs Lever Force

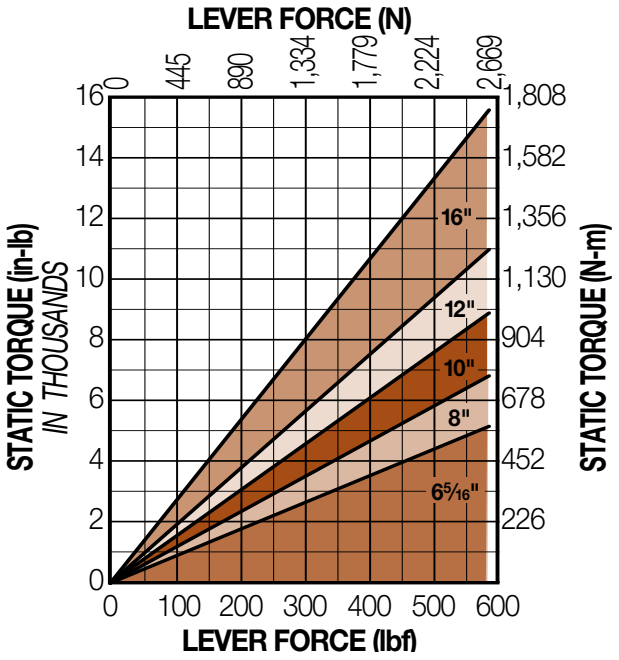

BRAKE MODEL LETTER CODES

A 5/32" Thick Disc	**L** 3/8" Thick Disc
B 1/4" Thick Disc	**M** Machined Cam (ME Brakes)
E 1/2" Thick Disc	**ME** Mechanical Brake
F Floating Bracket Mount	**Q**1-1/2" Thick Disc
I Iron	

SINGLE ACTING

FIXED MOUNT - FLOATING DISC

Accommodates disc thickness:	5/32"	1/4"	3/8"	1/2"	
Aluminum Weight	6.0 lbs.	2.72 kgs.			
Cast Iron Weight	10.9 lbs.	4.94 kgs.			

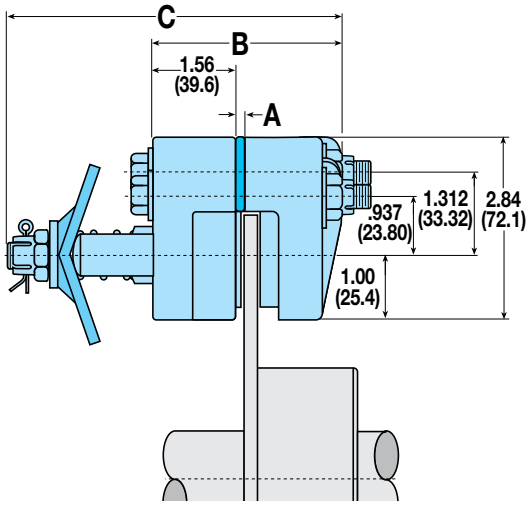

MODEL CODE	DISC THK.	A	B	C	OPTIONS / DESCRIPTION	ASSEMBLY NUMBER
ME220A	5/32"	–	3.03"	5.12"	Mechanical Brake	0745-0000
ME220MAI	5/32"	.500"	3.45"	5.64"	Machined Cam, Cast Iron	0745-0002
ME220B	1/4"	.094"	3.13"	5.22"	Mechanical Brake	0745-0010
ME220MBI	1/4"	.594"	3.55"	5.73"	Machined Cam, Cast Iron	0745-0012
ME220L	3/8"	.218"	3.25"	5.34"	Mechanical Brake	0745-0015
ME220E	1/2"	.344"	3.38"	5.47"	Mechanical Brake	0745-0020

MOUNTING DIMENSIONS

Disc Diameter		6.313"	8"	10"	12"	16"
	D	2.13"	3.00"	4.00"	5.00"	7.09"
Braking Radius		2.38"	3.15"	4.11"	5.08"	7.21"

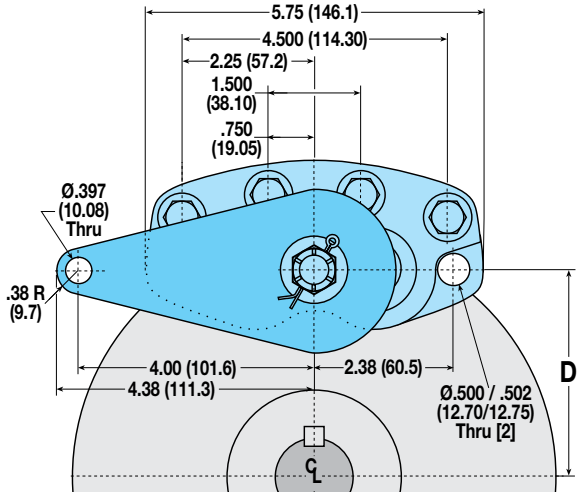

SINGLE ACTING WITH FLOATING BRACKET

FLOATING MOUNT - FIXED DISC

Accommodates disc thickness:	5/32"	1/4"	3/8"	1/2"	1-1/2"	
Aluminum Weight	7.5 lbs.	3.40 kgs.				
Cast Iron Weight	12.4 lbs.	5.62 kgs.				

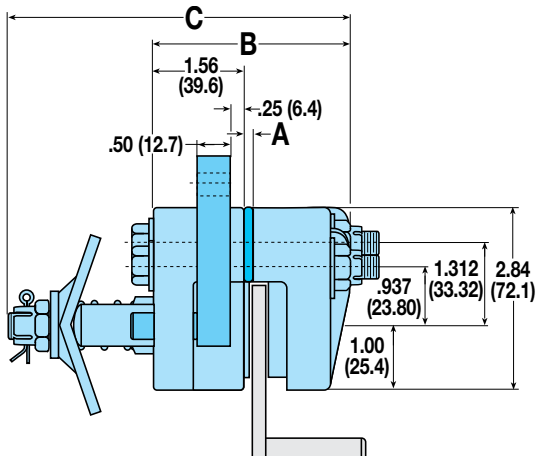

MODEL CODE	DISC THK.	A	B	C	OPTIONS / DESCRIPTION	ASSEMBLY NUMBER
ME220AF	5/32"	–	3.03"	5.12"	Floating Bracket	0745-0001
ME220MAFI	5/32"	.500"	3.45"	5.64"	Fltg Brkt, Mach Cam, Cast Iron	0745-0003
ME220BF	1/4"	.094"	3.13"	5.22"	Floating Bracket	0745-0011
ME220MBFI	1/4"	.594"	3.55"	5.73"	Fltg Brkt, Mach Cam, Cast Iron	0745-0013
ME220LF	3/8"	.218"	3.25"	5.34"	Floating Bracket	0745-0008
ME220MLFI	3/8"	.718"	3.67"	5.86"	Fltg Brkt, Mach Cam, Cast Iron	0745-0017
ME220EF	1/2"	.344"	3.38"	5.47"	Floating Bracket	0745-0021
ME220MEFI	1/2"	.844"	3.80"	5.98"	Fltg Brkt, Mach Cam, Cast Iron	0745-0024
ME220MQFI	1-1/2"	1.844"	4.80"	6.98"	Fltg Brkt, Mach Cam, Cast Iron	0745-0026

MOUNTING DIMENSIONS

Disc Diameter		6.313"	8"	10"	12"	16"
	D	2.13"	3.00"	4.00"	5.00"	7.09"
Braking Radius		2.38"	3.15"	4.11"	5.08"	7.21"

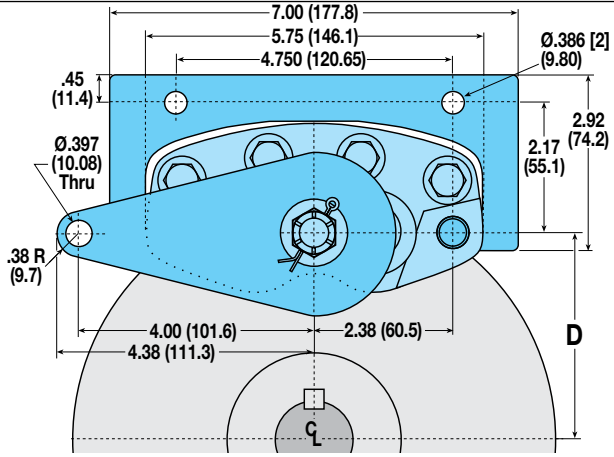

Caliper Disc Brakes

ORDER ONLINE

MB3 SERIES - CAST IRON

AVAILABLE STYLES

Single Acting

FIXED MOUNT - FLOATING DISC



PICTURED: 0790-0000

MB3 SPECIFICATIONS

Maximum lever force:	660 Lbs.
Accommodates Tolomatic disc diameters:	10", 12", 16"
Maximum disc diameter:	30"
Housing Material:	Cast iron
Bolts:	Zinc plated grade 5
Wearable friction material:	6.06 in^3
Friction material:	Replaceable, high-grade
Total lining area:	9.69 in^2
Machined Cam:	Positioning in 60° increments
Lining Wear Adjustment:	One step procedure
Designed to be more efficient and priced lower than competitive brakes	

CAM TRAVEL DATA

1. 0° travel with .500" disc.
2. 90° maximum travel after .125" wear on each side of lining without intermediate tightening of the lock nut.

PERFORMANCE DATA

Dynamic Torque vs Lever Force

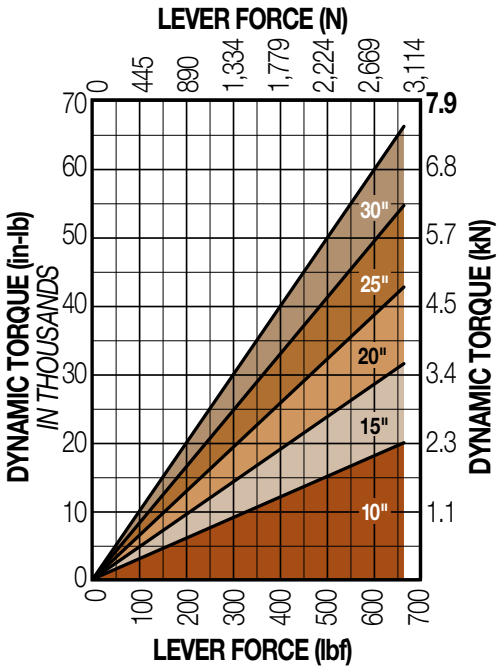

Static Torque vs Lever Force

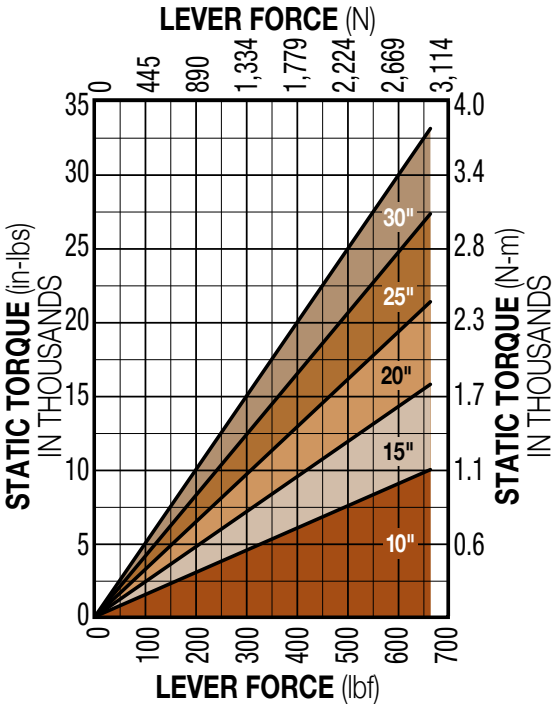

DISC SIZING EQUATIONS

DYNAMIC TORQUE (IN.-LBS.) = 6.99 x BRAKING RADIUS (IN.) x LEVER FORCE (LBS.)
STATIC (PARKING) TORQUE (IN.-LBS.) = 3.49 x BRAKING RADIUS (IN.) x LEVER FORCE (LBS.)
BRAKING RADIUS (IN.) = [DISC DIAMETER ÷ 2] - 0.688

NOTE: Braking Radius values are listed under "Mounting Dimensions" on page 61

MB3 SERIES - CAST IRON

SINGLE ACTING

FIXED MOUNT - FLOATING DISC

Accommodates disc thickness: 1/2"

Weight 13.2 lbs. 5.99 kgs.

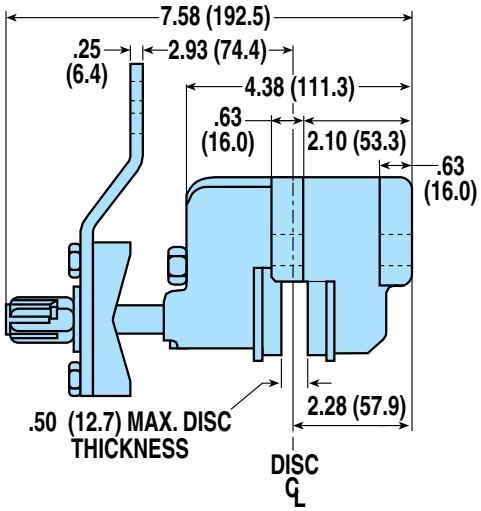

MODEL CODE	DISC THK.	OPTIONS / DESCRIPTION	ASSEMBLY NUMBER
MB3	1/2"	Mechanical Brake	0790-0000

MOUNTING DIMENSIONS

Disc Diameter		10"	15"	20"	25"	30"
	A	5.50"	8.00"	10.50"	13.00"	15.50"
Braking Radius		4.09"	6.59"	9.09"	11.59"	14.09"

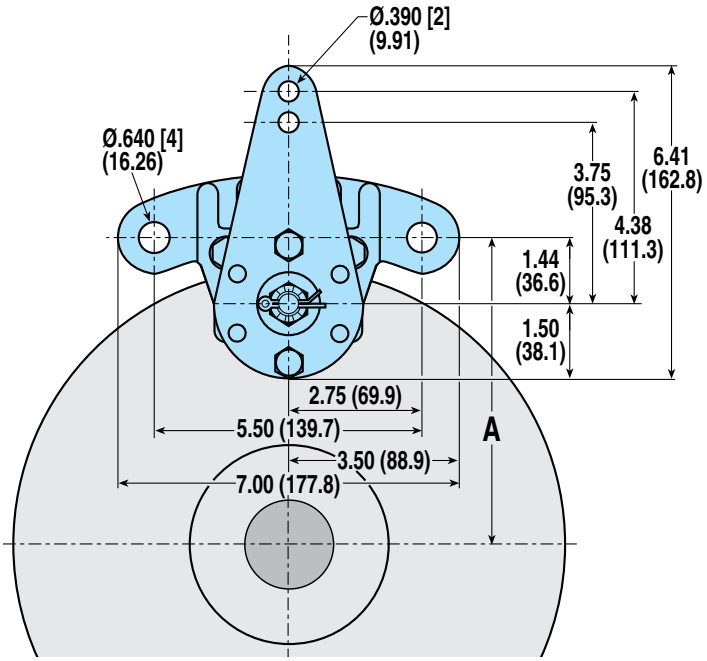

Caliper Disc Brakes

ORDER ONLINE

FS20 SERIES - ALUMINUM

AVAILABLE STYLES

Single Acting - Hydraulically Released

FLOATING MOUNT - FIXED DISC



PICTURED: 0760-0000

Single Acting - Pneumatically Released

FLOATING MOUNT - FIXED DISC



PICTURED: 0760-0016

FS20 SPECIFICATIONS

Maximum hydraulic pressure:	1,500 PSI non shock
Maximum pneumatic pressure:	100 PSI non shock
Minimum hydraulic pressure to release brake:	750 PSI
Minimum pneumatic pressure to release brake:	80 PSI (FS20P only)
Accommodates Tolomatic disc diameters:	6-5/16", 8", 10", 12", 16"
Maximum disc diameter:	none
Housing Material:	Die cast aluminum
Bolts:	Zinc plated grade 8
Seals:	Buna-N Standard
Wearable friction material, hydraulic:	.53 in^3
Wearable friction material, pneumatic:	.24 in^3
Friction material:	Replaceable, high-grade
Total lining area:	3.8 in^2
Floating bracket:	Standard
Fluid displacement, hydraulic:	0.056 in^3
Fluid displacement, pneumatic:	0.359 in^3
OPTIONS	
Seals:	EPR seals

BRAKE MODEL LETTER CODES

A 5/32" Thick Disc	**FS** Spring Applied	**P** Pneumatically Released
B 1/4" Thick Disc	**G** EPR Seals	

PERFORMANCE DATA

***Hydraulic Static Torque vs Lining Wear**

*For pneumatically released units (FS20P) see Disc Sizing Equations below

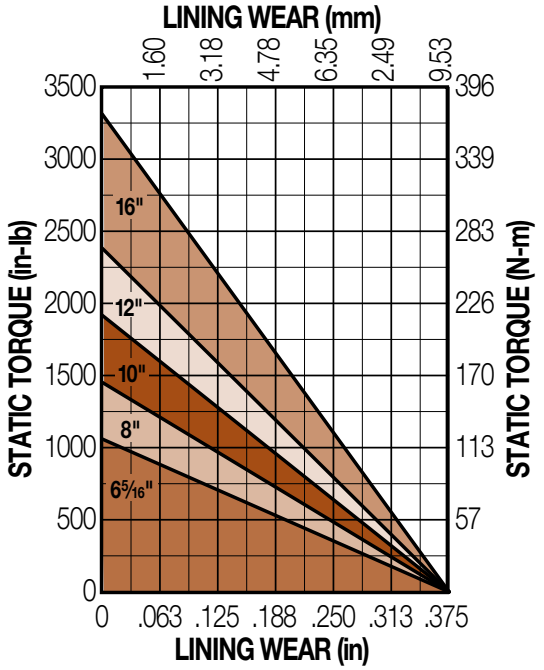

Tangential Force

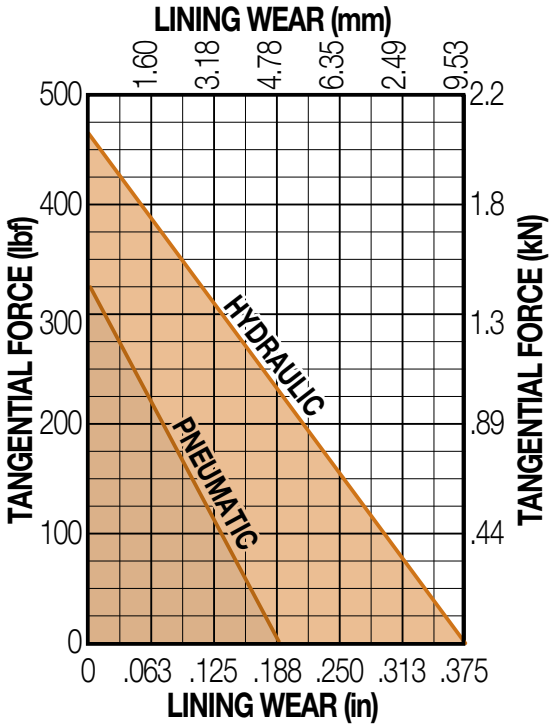

DISC SIZING EQUATIONS

STATIC (PARKING) TORQUE (IN.-LBS.) = TANGENTIAL FORCE (LBS.) x BRAKING RADIUS (IN.)

BRAKING RADIUS (IN.) = [DISC DIAMETER ÷ 2] - 0.875

NOTE: Braking Radius values are listed under "Mounting Dimensions" on page 63

FS20 SERIES - ALUMINUM

SINGLE ACTING WITH FLOATING BRACKET - HYDRAULICALLY RELEASED

FLOATING MOUNT - FIXED DISC

Accommodates disc thickness: 5/32" 1/4"

Weight 4.0 lbs. 1.81 kgs.

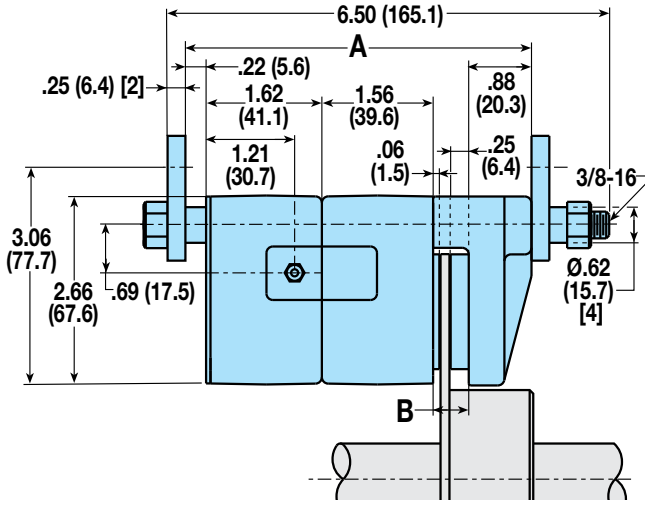

MODEL CODE	DISC THK.	A	B	OPTIONS / DESCRIPTION	ASSEMBLY NUMBER
FS20A	5/32"	4.78"	.500"	Spring Applied	0760-0000
FS20AG	5/32"	4.78"	.500"	Spring Applied, EPR Seals	0760-0003
FS20B	1/4"	4.87"	.594"	Spring Applied	0760-0001
FS20BG	1/4"	4.87"	.594"	Spring Applied, EPR Seals	0760-0004

SINGLE ACTING WITH FLOATING BRACKET - PNEUMATICALLY RELEASED

FLOATING MOUNT - FIXED DISC

Accommodates disc thickness: 5/32" 1/4"

Weight 7.75 lbs. 3.52 kgs.

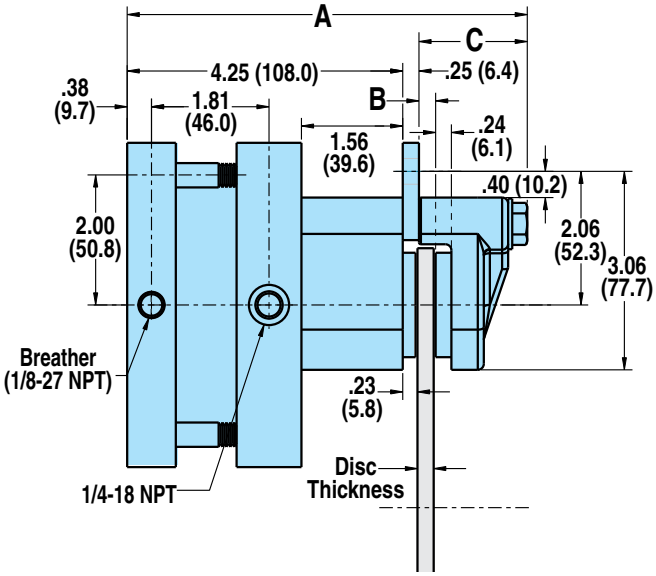

MODEL CODE	DISC THK.	A	B	C	OPTIONS / DESCRIPTION	ASSEMBLY NUMBER
FS20PA	5/32"	6.09"	.16"	1.59"	Spring Applied	0760-0023
FS20PB	1/4"	6.18"	.26"	1.68"	Spring Applied	0760-0016

MOUNTING DIMENSIONS

Disc Diameter		6.313"	8"	10"	12"	16"
Braking Radius	C	2.281"	3.125"	4.125"	5.125"	7.125"
	D	4.344"	5.188"	6.188"	7.188"	9.188"

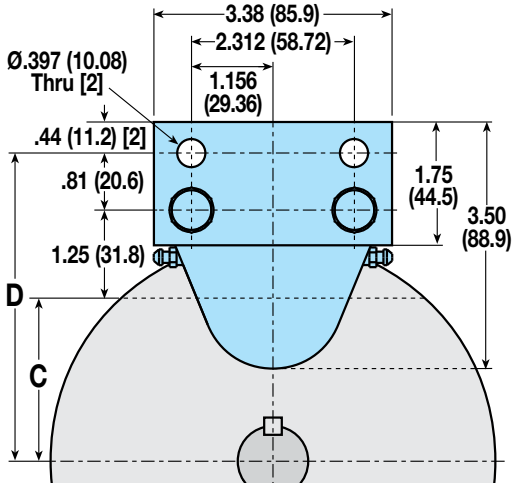

MOUNTING DIMENSIONS

Disc Diameter		6.313"	8"	10"	12"	16"
Braking Radius	D	2.281"	3.125"	4.125"	5.125"	7.125"
	E	4.281"	5.125"	6.125"	7.125"	9.125"

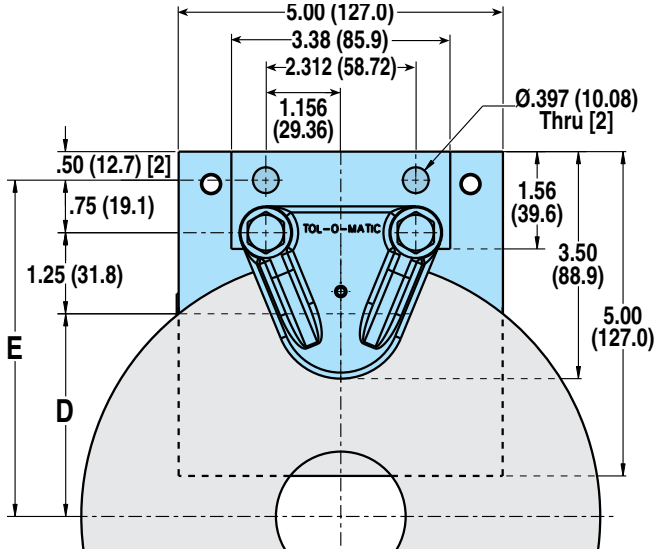

Caliper Disc Brakes

ORDER ONLINE

FS220B SERIES - ALUMINUM

AVAILABLE STYLES

Single Acting - B - 750 PSI Release

FLOATING MOUNT - FIXED DISC



PICTURED: 0740-0000

FS220B SPECIFICATIONS

Maximum hydraulic pressure:	2,000 PSI non shock
Minimum hydraulic pressure to release brake:	750 PSI
Accommodates Tolomatic disc diameters:	6-5/16", 8", 10", 12", 16"
Maximum disc diameter:	16"
Housing Material:	Die cast aluminum
Bolts:	Zinc plated grade 8
Seals:	Buna-N Standard
Wearable friction material:	1.6 in^3
Friction material:	Replaceable, high-grade
Total lining area:	7.5 in^2
Floating bracket:	Standard
Fluid displacement:	0.113 in^3

BRAKE MODEL LETTER CODES

A 5/32" Thick Disc	**E** 1/2" Thick Disc	**L** 3/8" Thick Disc
B 1/4" Thick Disc	**FS** Spring Applied	

PERFORMANCE DATA

Static Torque vs Lining Wear

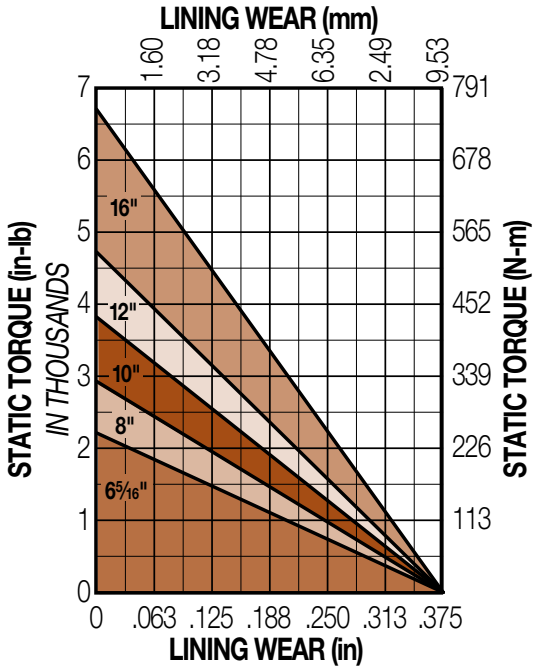

Tangential Force

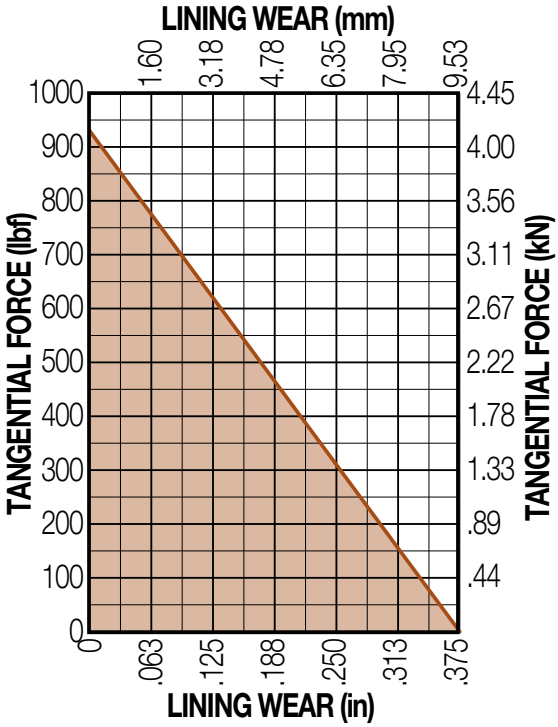

DISC SIZING EQUATIONS

STATIC (PARKING) TORQUE (IN.-LBS.) = **TANGENTIAL FORCE** (LBS.) x **BRAKING RADIUS** (IN.)

NOTE: Braking Radius values are listed under "Mounting Dimensions" on page 65

FS220B SERIES - ALUMINUM

SINGLE ACTING WITH FLOATING BRACKET

FLOATING MOUNT - FIXED DISC

Accommodates disc thickness:	5/32"	1/4"	3/8"	1/2"
Weight	8.0 lbs.	3.63 kgs.		

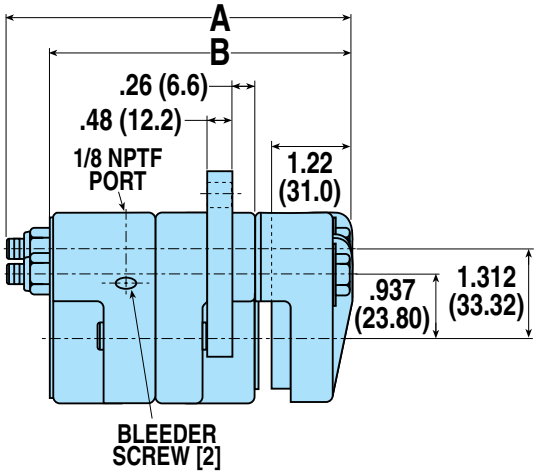

MODEL CODE	DISC THK.	A	B	OPTIONS / DESCRIPTION	ASSEMBLY NUMBER
FS220BA	5/32"	5.31"	4.56"	Floating Bracket, "B" Strength	0740-0000
FS220BB	1/4"	5.31"	4.65"	Floating Bracket, "B" Strength	0740-0017
FS220BL	3/8"	5.81"	4.78"	Floating Bracket, "B" Strength	0740-0019
FS220BE	1/2"	5.81"	4.90"	Floating Bracket, "B" Strength	0740-0021

MOUNTING DIMENSIONS

Disc Diameter		6.313"	8"	10"	12"	16"
Braking Radius		2.38"	3.15"	4.11"	5.08"	7.21"
	C	4.30"	5.17"	6.17"	7.17"	9.17"
	D	3.45"	4.32"	5.32"	6.32"	8.41"
	E	3.07"	3.94"	4.94"	5.94"	8.03"
	F	2.13"	3.00"	4.00"	5.00"	7.09"

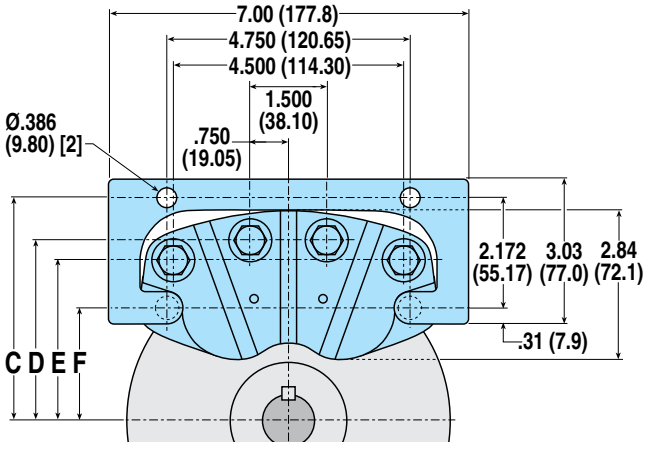

Caliper Disc Brakes

ORDER ONLINE

FS220C SERIES - ALUMINUM

AVAILABLE STYLES

Single Acting - C - 1500 PSI Release

FLOATING MOUNT - FIXED DISC

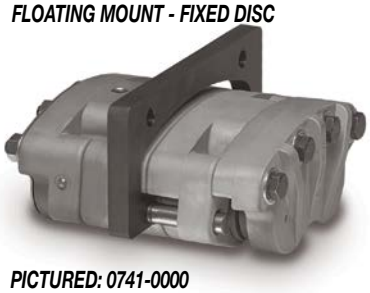

PICTURED: 0741-0000

FS220C SPECIFICATIONS

Maximum hydraulic pressure:	2,000 PSI non shock
Minimum hydraulic pressure to release brake:	1500 PSI
Accommodates Tolomatic disc diameters:	6-5/16", 8", 10", 12", 16"
Maximum disc diameter:	16"
Housing Material:	Die cast aluminum
Bolts:	Zinc plated grade 8
Seals:	Buna-N Standard
Wearable friction material:	1.6 in^3
Friction material:	Replaceable, high-grade
Total lining area:	7.5 in^2
Floating bracket:	Standard
Fluid displacement:	0.113 in^3

BRAKE MODEL LETTER CODES

A 5/32" Thick Disc	**E** 1/2" Thick Disc	**L** 3/8" Thick Disc
B 1/4" Thick Disc	**FS** Spring Applied	

PERFORMANCE DATA

Static Torque vs Lining Wear

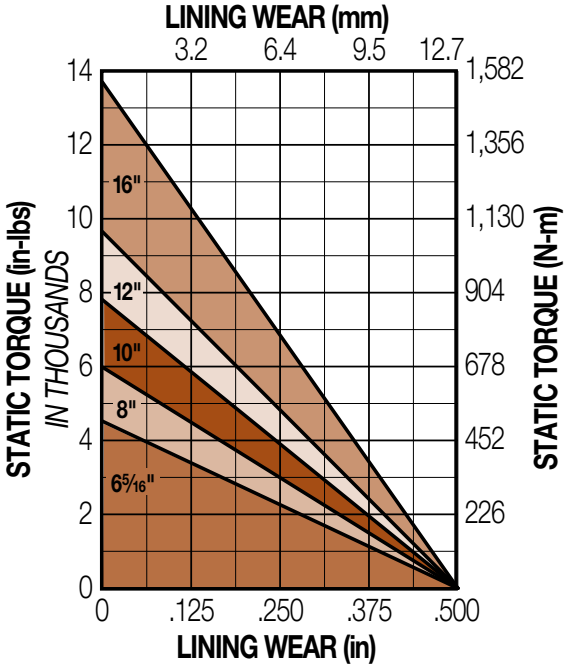

Tangential Force

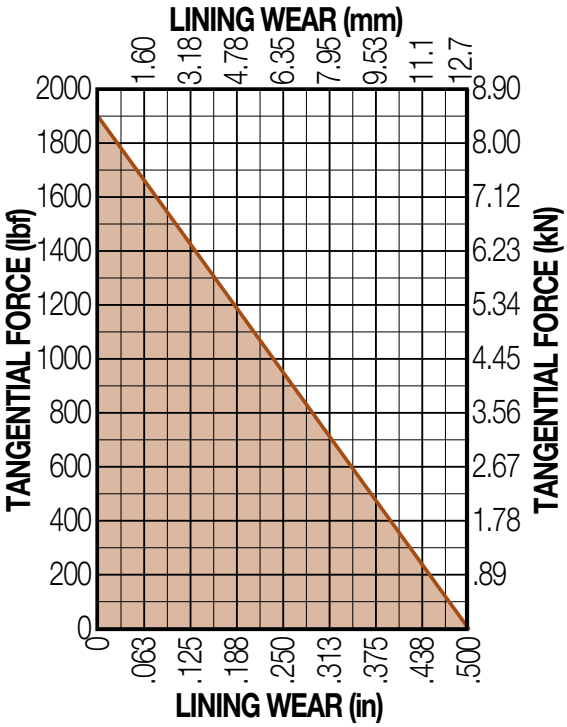

DISC SIZING EQUATIONS

STATIC (PARKING) TORQUE (IN.-LBS.) = **TANGENTIAL FORCE** (LBS.) x **BRAKING RADIUS** (IN.)

NOTE: Braking Radius values are listed under "Mounting Dimensions" on page 67

FS220C SERIES - ALUMINUM

SINGLE ACTING WITH FLOATING BRACKET

FLOATING MOUNT - FIXED DISC

Accommodates disc thickness:	5/32"	1/4"	3/8"	1/2"
Weight	8.0 lbs.	3.63 kgs.		

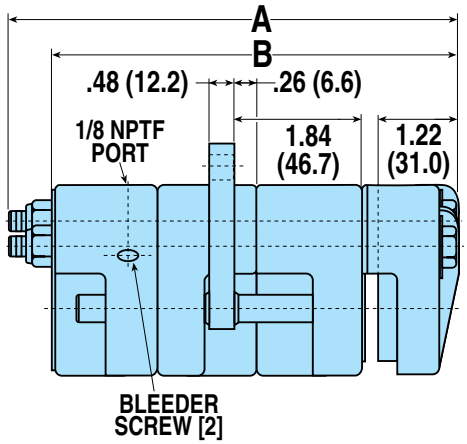

MODEL CODE	DISC THK.	A	B	OPTIONS / DESCRIPTION	ASSEMBLY NUMBER
FS220CA	5/32"	6.81"	6.16"	Floating Bracket, "C" Strength	0741-0000
FS220CB	1/4"	6.81"	6.25"	Floating Bracket, "C" Strength	0741-0018
FS220CL	3/8"	7.31"	6.38"	Floating Bracket, "C" Strength	0741-0020
FS220CE	1/2"	7.31"	6.50"	Floating Bracket, "C" Strength	0741-0022

MOUNTING DIMENSIONS

Disc Diameter		6.313"	8"	10"	12"	16"
Braking Radius		2.38"	3.15"	4.11"	5.08"	7.21"
	C	4.30"	5.17"	6.17"	7.17"	9.17"
	D	3.45"	4.32"	5.32"	6.32"	8.41"
	E	3.07"	3.94"	4.94"	5.94"	8.03"
	F	2.13"	3.00"	4.00"	5.00"	7.09"

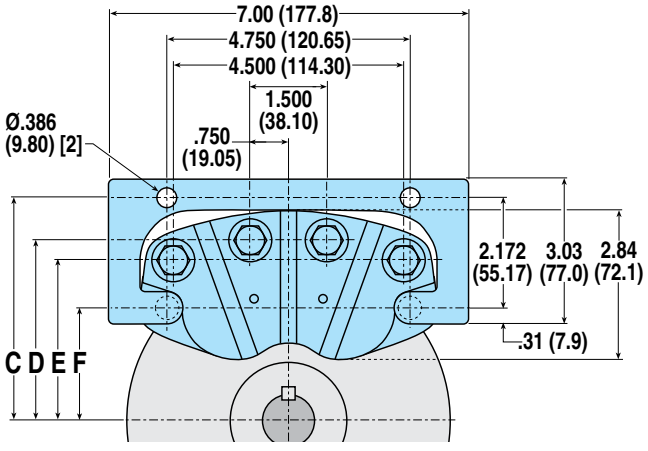

Caliper Disc Brakes

ORDER ONLINE

FS220BI SERIES - DUCTILE IRON

AVAILABLE STYLES

Single Acting - B - 750 PSI Release

FLOATING MOUNT - FIXED DISC

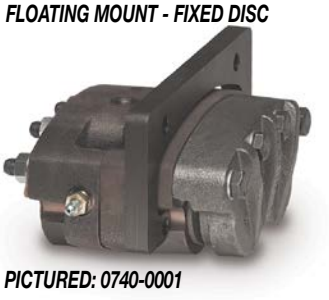

PICTURED: 0740-0001

FS220BI SPECIFICATIONS

Maximum hydraulic pressure:	2,000 PSI non shock
Minimum hydraulic pressure to release brake:	750 PSI
Accommodates Tolomatic disc diameters:	6-5/16", 8", 10", 12", 16"
Maximum disc diameter:	16"
Housing Material:	Cast ductile iron
Bolts:	Zinc plated grade 8
Seals:	Buna-N Standard
Wearable friction material:	2.7 in^3
Friction material:	Replaceable, high-grade
Total lining area:	9.6 in^2
Floating bracket:	Standard
Fluid displacement:	0.113 in^3
Recommended wear compensation interval:	.06 in. lining wear

BRAKE MODEL LETTER CODES

A 5/32" Thick Disc	**FS** Spring Applied	**K** Manual Compensator
B 1/4" Thick Disc	**I** Iron	**L** 3/8" Thick Disc
E 1/2" Thick Disc	**J** Manual Retractor	

PERFORMANCE DATA

Static Torque vs Lining Wear

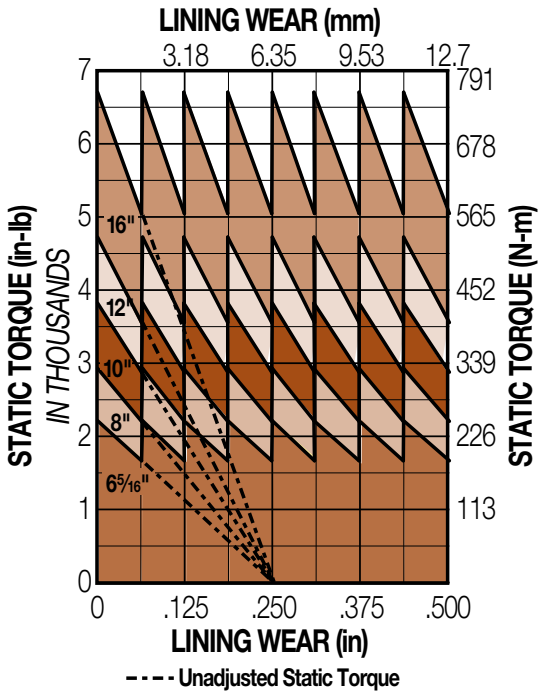

Tangential Force

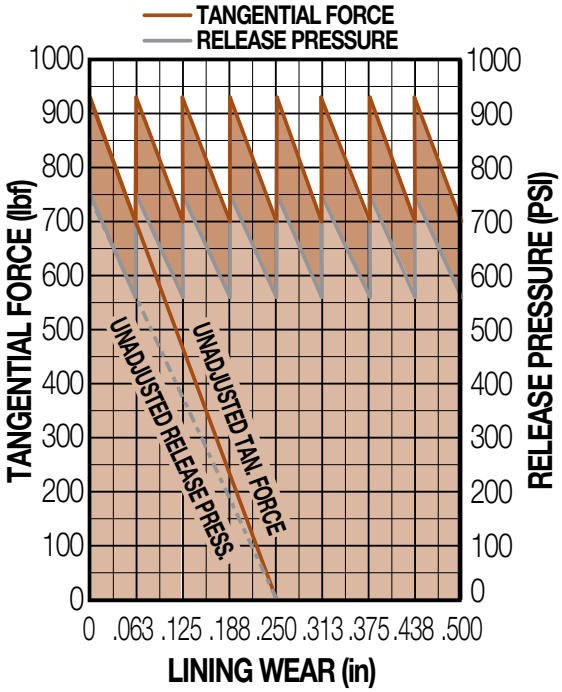

DISC SIZING EQUATIONS

STATIC (PARKING) TORQUE (IN.-LBS.) = TANGENTIAL FORCE (LBS.) x BRAKING RADIUS (IN.)

NOTE: Braking Radius values are listed under "Mounting Dimensions" on page 69

SINGLE ACTING WITH FLOATING BRACKET

FLOATING MOUNT - FIXED DISC

Accommodates disc thickness:	5/32"	1/4"	3/8"	1/2"
Weight	14.5 lbs.	6.58 kgs.		

STANDARD MODELS

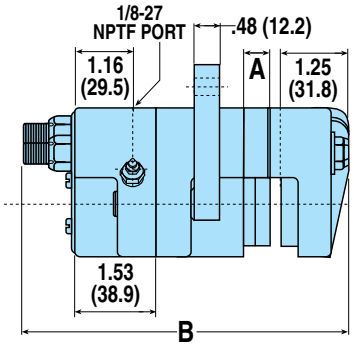

JK OPTION MODELS

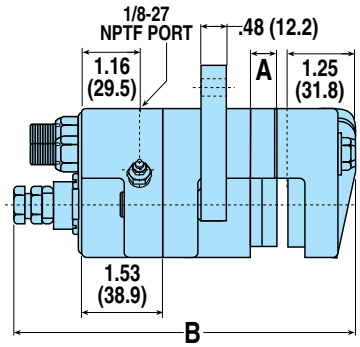

MODEL CODE	DISC THK.	A	B	OPTIONS / DESCRIPTION	ASSEMBLY NUMBER
FS220BIA	5/32"	—	5.27"	Floating Bracket, "B" Strength	0740-0001
FS220BIB	1/4"	.093"	5.77"	Floating Bracket, "B" Strength	0740-0003
FS220BIL	3/8"	.218"	5.77"	Floating Bracket, "B" Strength	0740-0004
FS220BIE	1/2"	.344"	5.77"	Floating Bracket, "B" Strength	0740-0005
FS220BIAJK	5/32"	.500"	6.32"	Ftg Bkt,"B"Stgh,ManRet,ManComp	0740-0006
FS220BIBJK	1/4"	.594"	6.42"	Ftg Bkt,"B"Stgh,ManRet,ManComp	0740-0007
FS220BILJK	3/8"	.718"	6.54"	Ftg Bkt,"B"Stgh,ManRet,ManComp	0740-0008
FS220BIEJK	1/2"	.844"	6.67"	Ftg Bkt,"B"Stgh,ManRet,ManComp	0740-0009

MOUNTING DIMENSIONS

Disc Diameter		6.313"	8"	10"	12"	16"
Braking Radius		2.38"	3.15"	4.11"	5.08"	7.21"
	C	4.30"	5.17"	6.17"	7.17"	9.17"
	D	3.45"	4.32"	5.32"	6.32"	8.41"
	E	3.07"	3.94"	4.94"	5.94"	8.03"
	F	2.13"	3.00"	4.00"	5.00"	7.09"

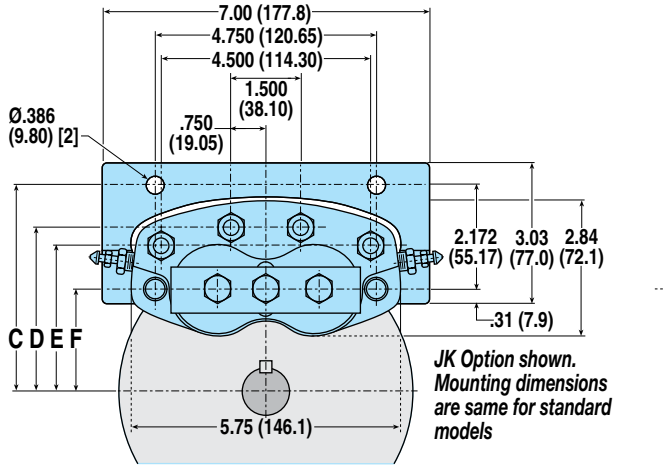

JK Option shown. Mounting dimensions are same for standard models

Caliper Disc Brakes

ORDER ONLINE

FS220CI SERIES - DUCTILE IRON

AVAILABLE STYLES

Single Acting - C - 1500 PSI Release

FLOATING MOUNT - FIXED DISC



PICTURED: 0741-0009 (Shown with JK Option)

FS220CI SPECIFICATIONS

Maximum hydraulic pressure:	2,000 PSI non shock
Minimum hydraulic pressure to release brake:	1500 PSI
Accommodates Tolomatic disc diameters:	6-5/16", 8", 10", 12", 16"
Maximum disc diameter:	16"
Housing Material:	Cast ductile iron
Bolts:	Zinc plated grade 8
Seals:	Buna-N Standard
Wearable friction material:	2.7 in^3
Friction material:	Replaceable, high-grade
Total lining area:	9.6 in^2
Floating bracket:	Standard
Fluid displacement:	0.113 in^3
Recommended wear compensation interval:	.10 in. lining wear

BRAKE MODEL LETTER CODES

A 5/32" Thick Disc	**FS** Spring Applied	**K** Manual Compensator
B 1/4" Thick Disc	**I** Iron	**L** 3/8" Thick Disc
E 1/2" Thick Disc	**J** Manual Retractor	

PERFORMANCE DATA

Static Torque vs Lining Wear

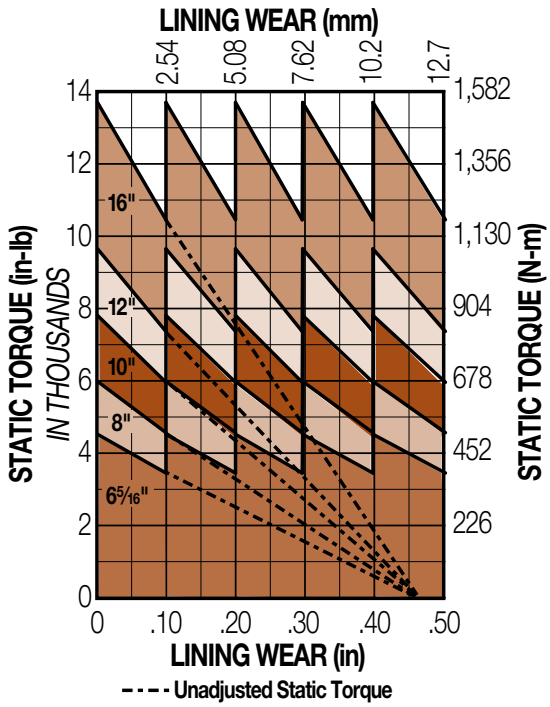

Tangential Force

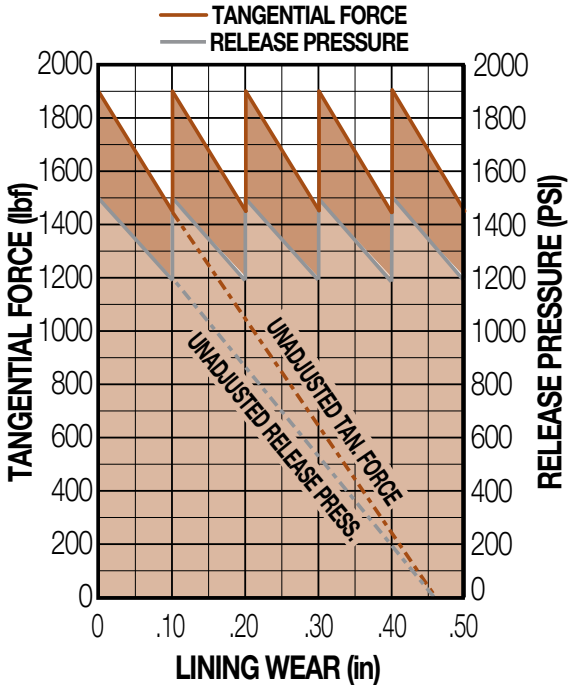

DISC SIZING EQUATIONS

STATIC (PARKING) TORQUE (IN.-LBS.) = TANGENTIAL FORCE (LBS.) x BRAKING RADIUS (IN.)

NOTE: Braking Radius values are listed under "Mounting Dimensions" on page 71

FS220CI SERIES - DUCTILE IRON

SINGLE ACTING WITH FLOATING BRACKET

FLOATING MOUNT - FIXED DISC

Accommodates disc thickness:	5/32"	1/4"	3/8"	1/2"
Weight	20.0 lbs.	9.07 kgs.		

STANDARD MODELS

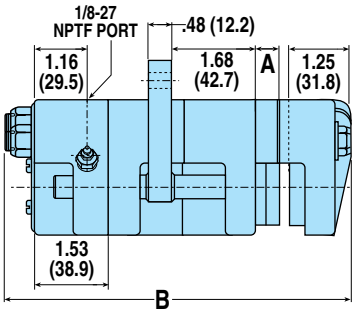

JK OPTION MODELS

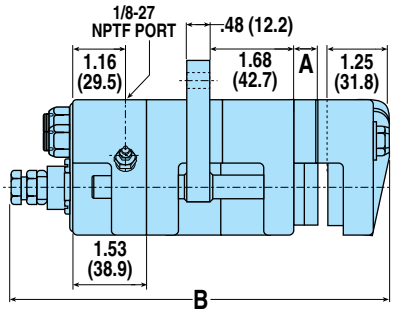

MODEL CODE	DISC THK.	A	B	OPTIONS / DESCRIPTION	ASSEMBLY NUMBER
FS220CIA	5/32"	—	6.77"	Floating Bracket, "C" Strength	0741-0005
FS220CIB	1/4"	.093"	6.77"	Floating Bracket, "C" Strength	0741-0006
FS220CIL	3/8"	.218"	7.27"	Floating Bracket, "C" Strength	0741-0007
FS220CIE	1/2"	.344"	7.27"	Floating Bracket, "C" Strength	0741-0008
FS220CIAJK	5/32"	.562"	7.96"	Ftg Bkt,"C"Stgh,ManRet,ManComp	0741-0009
FS220CIBJK	1/4"	.656"	8.06"	Ftg Bkt,"C"Stgh,ManRet,ManComp	0741-0010
FS220CILJK	3/8"	.780"	8.18"	Ftg Bkt,"C"Stgh,ManRet,ManComp	0741-0011
FS220CIEJK	1/2"	.906"	8.32"	Ftg Bkt,"C"Stgh,ManRet,ManComp	0741-0012

MOUNTING DIMENSIONS

Disc Diameter		6.313"	8"	10"	12"	16"
Braking Radius		2.38"	3.15"	4.11"	5.08"	7.21"
	C	4.30"	5.17"	6.17"	7.17"	9.17"
	D	3.45"	4.32"	5.32"	6.32"	8.41"
	E	3.07"	3.94"	4.94"	5.94"	8.03"
	F	2.13"	3.00"	4.00"	5.00"	7.09"

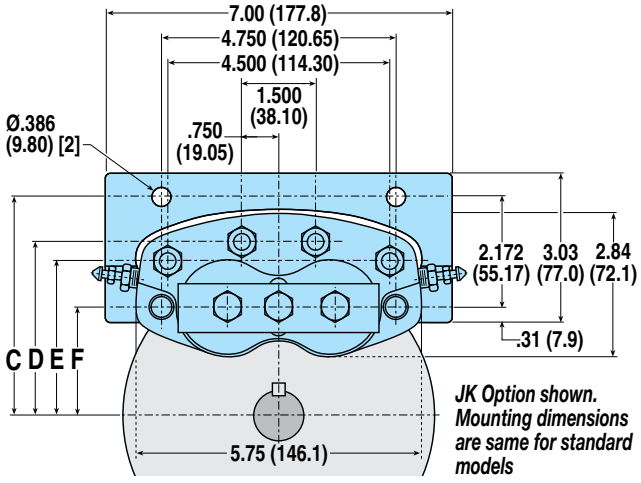

JK Option shown. Mounting dimensions are same for standard models

Caliper Disc Brakes

ORDER ONLINE

FS595 SERIES - DUCTILE IRON

AVAILABLE STYLES

Double Acting

FLOATING MOUNT - FIXED DISC



PICTURED: 0781-0000

FS595 SPECIFICATIONS

Maximum hydraulic pressure:	2,000 PSI non shock
Minimum hydraulic pressure to release brake:	1,400 PSI
Accommodates Tolomatic disc diameters:	16"
Minimum disc diameter:	14"
Maximum disc diameter:	none
Housing Material:	Cast ductile iron
Bolts:	Zinc plated grade 8
Seals:	Buna-N Standard
Wearable friction material:	3.43 in^3
Friction material:	Replaceable, high-grade
Total lining area:	9.14 in^2
Fluid displacement for .03 inch clearance:	0.230 in^3
Recommended wear compensation interval:	.25 in. lining wear

OPTIONS

Seals:	Viton® seals
Adaptable to thinner discs:	Consult factory

BRAKE MODEL LETTER CODES

C With Bleeder Fittings	**FS** Spring Applied	**O** 1-1/4" Thick Disc
D Double Acting	**I** Iron	**Q** 1-1/2" Thick Disc
E 1/2" Thick Disc	**K** Manual Compensator	**V** Viton® Seals

PERFORMANCE DATA

Static Torque vs Lining Wear

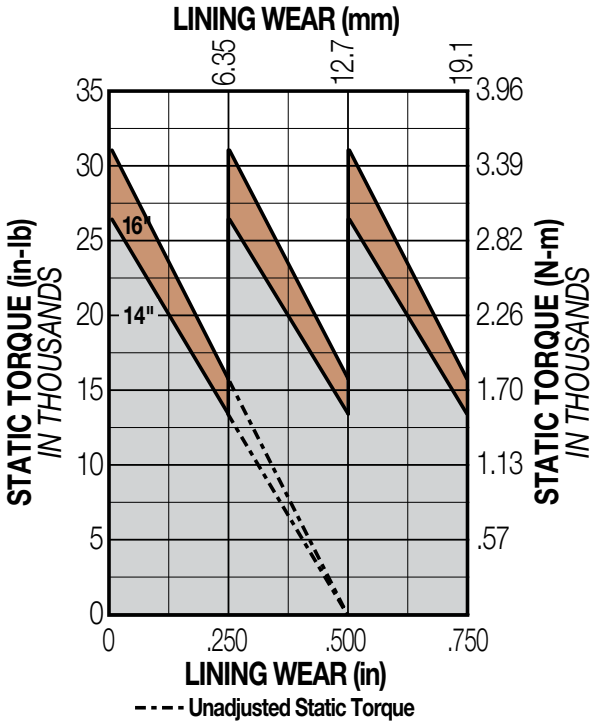

Tangential Force

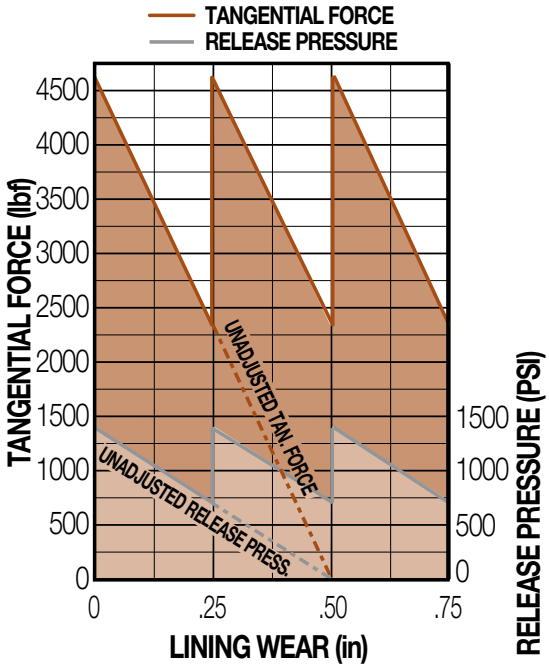

DISC SIZING EQUATIONS

STATIC (PARKING) TORQUE (IN.-LBS.) = TANGENTIAL FORCE (LBS.) x BRAKING RADIUS (IN.)

BRAKING RADIUS (IN.) = [DISC DIAMETER ÷ 2] - 1.280

NOTE: Braking Radius values are listed under "Mounting Dimensions" on page 73

DOUBLE ACTING

FIXED MOUNT - FIXED DISC

Accommodates disc thickness: 1/2" 1-1/4" 1-1/2"

Weight 36.0 lbs. 16.33 kgs.

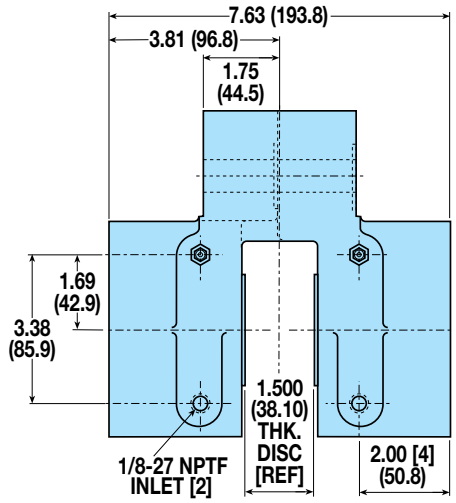

MODEL CODE	DISC THK.	OPTIONS / DESCRIPTION	ASSEMBLY NUMBER
FS595DCIKE	1/2"	Double Acting, Iron, Man Wear Comp	0781-0011
FS595DCIKO	1-1/4"	Double Acting, Iron, Man Wear Comp	0781-0018
FS595DCIKQ	1-1/2"	Double Acting, Iron, Man Wear Comp	0781-0000
FS595DCIKQV	1-1/2"	Dbl Act, Iron, Man Comp, Viton® Seals	0781-0001

MOUNTING DIMENSIONS

Disc Diameter		14"	16"
	A	9.16"	10.16"
Braking Radius	B	5.72"	6.72"

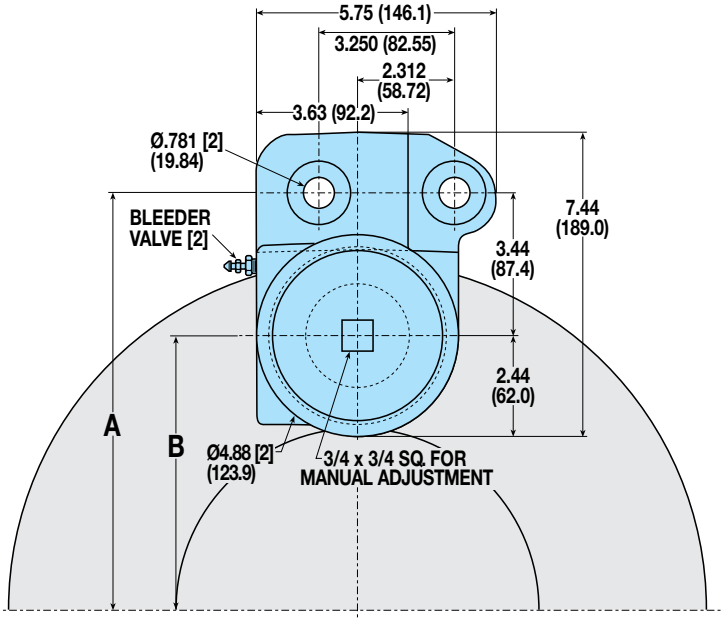

Viton® is a registered trademark of the E.I. Du Pont de Newmours Co., www.dupont.com

SEE NEXT PAGE FOR FS595 DUAL

Caliper Disc Brakes

ORDER ONLINE

FS595 DUAL SERIES - DUCTILE IRON

AVAILABLE STYLES

Double Acting

FLOATING MOUNT - FIXED DISC



PICTURED: 0782-0003

FS595 DUAL SPECIFICATIONS

Maximum hydraulic pressure:	2,000 PSI non shock
Minimum hydraulic pressure to release brake:	1,400 PSI
Accommodates Tolomatic disc diameters:	16"
Minimum disc diameter:	14"
Maximum disc diameter:	none
Housing Material:	Cast ductile iron
Bolts:	Zinc plated grade 8
Seals:	Buna-N Standard
Wearable friction material:	6.86 in^3
Friction material:	Replaceable, high-grade
Total lining area:	18.28 in^2
Fluid displacement for .03 inch clearance:	0.460 in^3
Recommended wear compensation interval:	.25 in. lining wear
OPTIONS	
Adaptable to thinner discs:	Consult factory

BRAKE MODEL LETTER CODES

C With Bleeder Fittings	**FS** Spring Applied	**L** 3/8" Thick Disc
D Double Acting	**I** Iron	**N** 1" Thick Disc
E 1/2" Thick Disc	**K** Manual Compensator	**Q** 1-1/2" Thick Disc

PERFORMANCE DATA

Static Torque vs Lining Wear

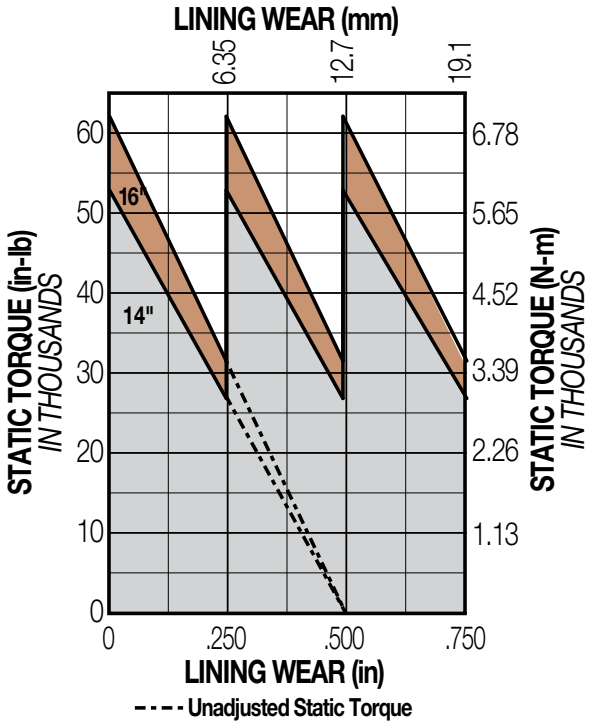

Tangential Force

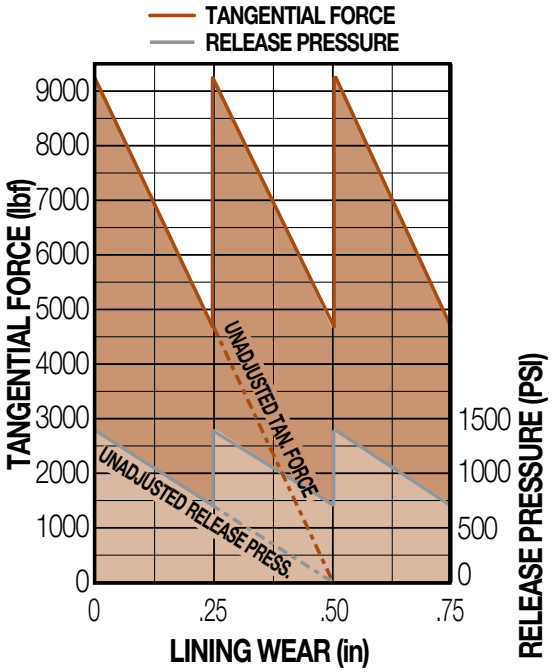

DISC SIZING EQUATIONS

STATIC (PARKING) TORQUE = TANGENTIAL FORCE x BRAKING RADIUS

BRAKING RADIUS = [DISC DIAMETER ÷ 2] - 1.280

NOTE: Braking Radius values are listed under "Mounting Dimensions" on page 75

DOUBLE ACTING

FIXED MOUNT - FIXED DISC

Accommodates disc thickness: 3/8" 1/2" 1" 1-1/2"

Weight 72.0 lbs. 32.66 kgs.

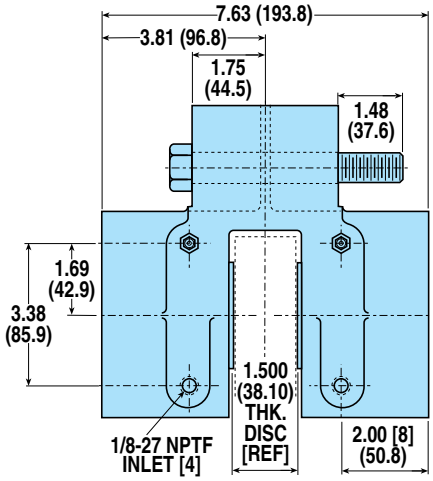

MODEL CODE	DISC THK.	OPTIONS / DESCRIPTION	ASSEMBLY NUMBER
FS595DCIKL-Dual	3/8"	DUAL, Double Acting, Iron, Man Wear Comp	0782-0006
FS595DCIKE-Dual	1/2"	DUAL, Double Acting, Iron, Man Wear Comp	0782-0007
FS595DCIKN-Dual	1"	DUAL, Double Acting, Iron, Man Wear Comp	0782-0008
FS595DCIKQ-Dual	1-1/2"	DUAL, Double Acting, Iron, Man Wear Comp	0782-0003

MOUNTING DIMENSIONS

Disc Diameter		14"	16"
	A	8.58"	9.67"
	B	5.23"	6.23"
Braking Radius	C	5.72"	6.72"

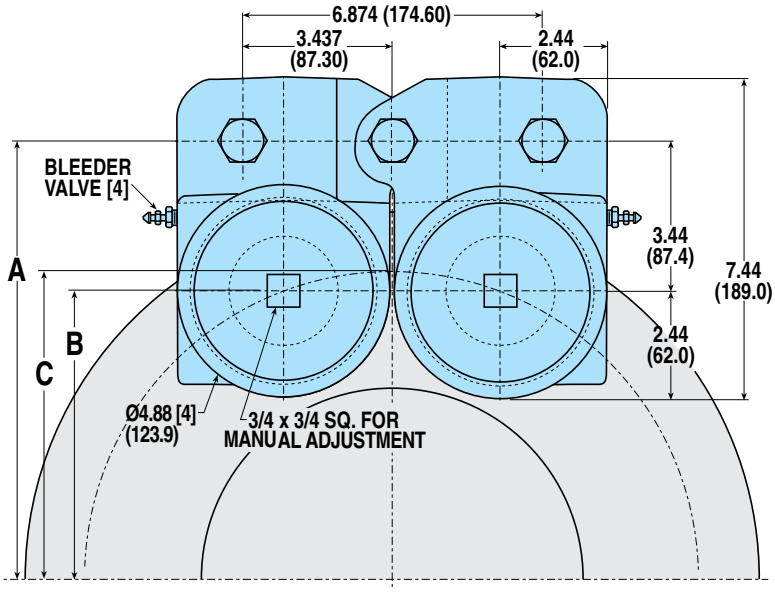

Top View

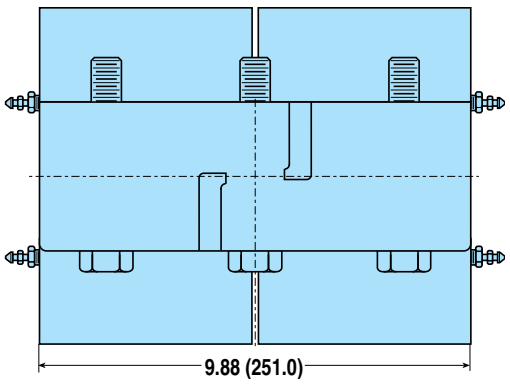

Caliper Disc Brakes

ORDER ONLINE

FIXED HUB & DISC ASSEMBLIES

AVAILABLE STYLES

Hub & Disc Assembly



PICTURED: 0802-0020

FIXED HUB & DISC SPECIFICATIONS

Disc material:	Carbon 1010 steel
Disc manufacturing details:	Flat within .010 inch, stress relieved and blanchard ground to an 80 (RMS) micro-inch finish
Hub material:	Machined from cold rolled steel
Included fasteners:	Socket head cap screws Keyway set screws

PERFORMANCE DATA

Maximum Power Capacity

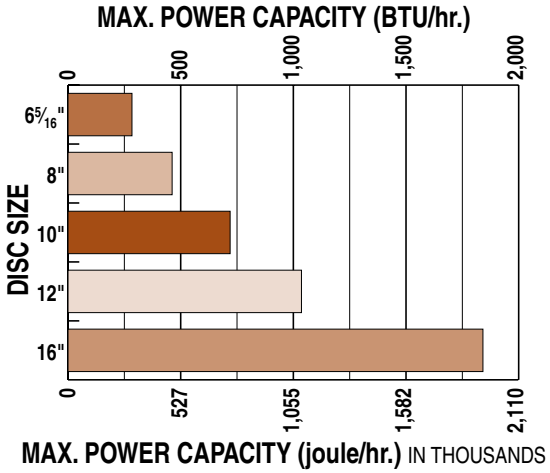

Maximum Torque Ratings

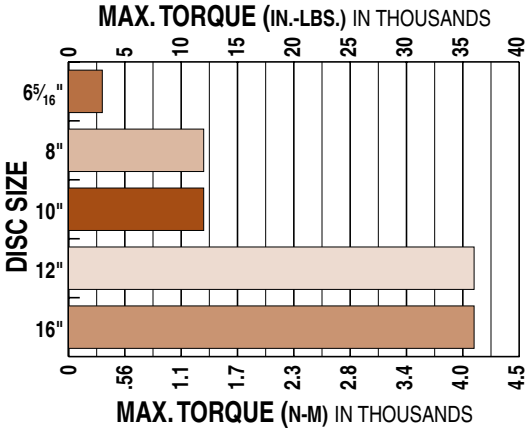

*Single Stop Maximum Energy Absorption Capacities**

**Disc temperature 380° F*

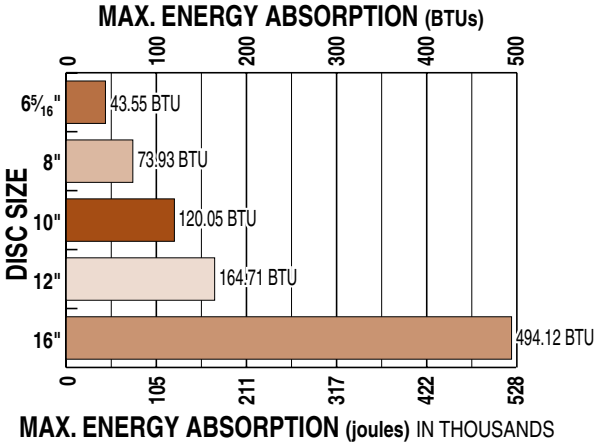

6⁵⁄₁₆" DISC

For use with pneumatic, hydraulic, mechanical or spring applied caliper disc brakes

Weight 1.4 lbs. .64 kgs. Disc Thickness: 0.156"

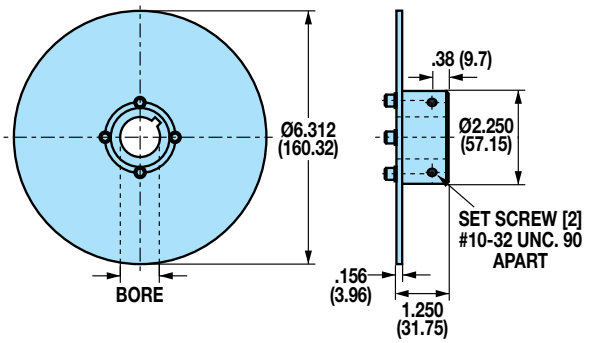

ASSY NO.	BORE	KEY SIZE
0801-0008	.500"	.125" x .125"
0801-0010	.625"	.188" x .188"
0801-0012	.750"	.188" x .188"

ASSY NO.	BORE	KEY SIZE
0801-0014	.875"	.188" x .188"
0801-0016	1.000"	.250" x .250"

10" DISC

For use with pneumatic, hydraulic, mechanical or spring applied caliper disc brakes

Weight 5.5 lbs. 2.49 kgs. Disc Thickness: 0.156"

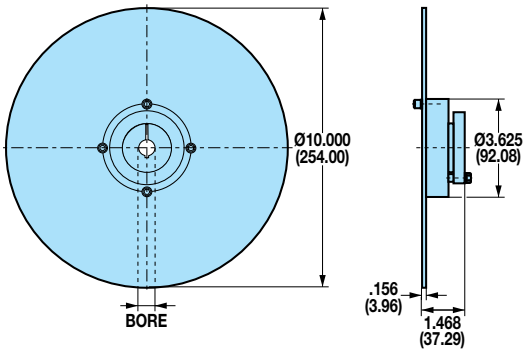

ASSY NO.	BORE	KEY SIZE
0803-0016	1.000"	.250" x .250"
0803-0018	1.125"	.250" x .250"
0803-0020	1.250"	.250" x .250"
0803-0022	1.375"	.313" x .313"

ASSY NO.	BORE	KEY SIZE
0803-0024	1.500"	.375" x .375"
0803-0026	1.625"	.375" x .375"
0803-0028	1.750"	.375" x .375"

8" DISC

For use with pneumatic, hydraulic, mechanical or spring applied caliper disc brakes

Weight 3.5 lbs. 1.59 kgs. Disc Thickness: 0.156"

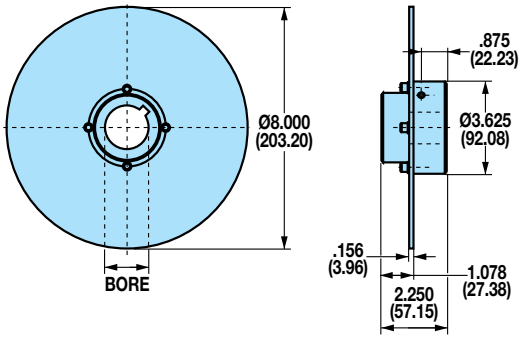

ASSY NO.	BORE	KEY SIZE
0802-0016	1.000"	.250" x .250"
0802-0018	1.125"	.250" x .250"
0802-0020	1.250"	.250" x .250"
0802-0022	1.375"	.313" x .313"

ASSY NO.	BORE	KEY SIZE
0802-0024	1.500"	.375" x .375"
0802-0026	1.625"	.375" x .375"
0802-0028	1.750"	.375" x .375"

12" DISC

For use with pneumatic, hydraulic, mechanical or spring applied caliper disc brakes

Weight 7.9 lbs. 3.58 kgs. Disc Thickness: 0.156"

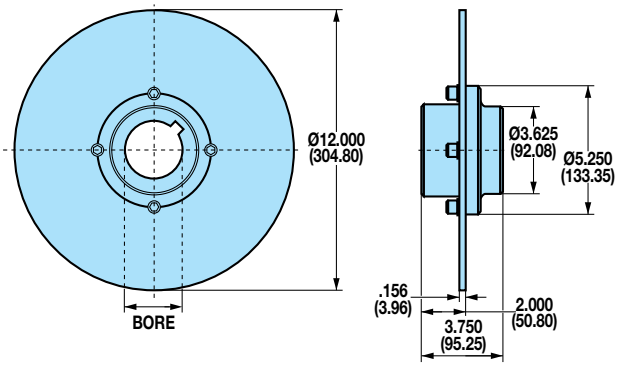

ASSY NO.	BORE	KEY SIZE
0804-0024	1.500"	.375" x .375"
0804-0028	1.750"	.375" x .375"
0804-0032	2.000"	.500" x .500"

ASSY NO.	BORE	KEY SIZE
0804-0036	2.250"	.500" x .500"
0804-0040	2.500"	.625" x .625"

16" DISC

For use with pneumatic, hydraulic, mechanical or spring applied caliper disc brakes

Weight 14.1 lbs. 6.40 kgs. Disc Thickness: 0.250"

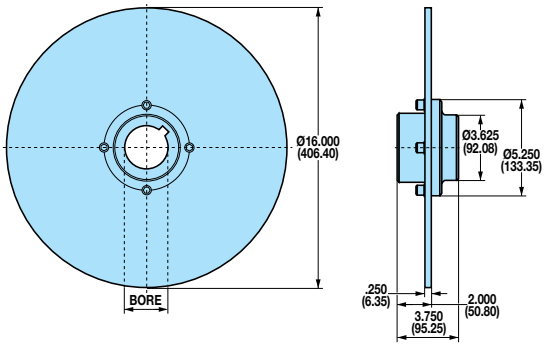

ASSY NO.	BORE	KEY SIZE
0805-0024	1.500"	.375" x .375"
0805-0028	1.750"	.375" x .375"
0805-0032	2.000"	.500" x .500"

ASSY NO.	BORE	KEY SIZE
0805-0036	2.250"	.500" x .500"
0805-0040	2.500"	.625" x .625"

Caliper Disc Brakes

ORDER ONLINE

FIXED HUB & DISC ASSEMBLIES WITH QUICK DISCONNECT (Q.D.) BUSHINGS

AVAILABLE STYLES

Hub & Disc Assembly with Quick Disconnect (Q.D.) Bushings



PICTURED: 0808-0114

FIXED HUB & DISC SPECIFICATIONS

Disc material:	Carbon 1010 steel
Disc manufacturing details:	Flat within .010 inch, stress relieved and blanchard ground to an 80 (RMS) micro-inch finish
Bushings:	Upper lock quick disconnect
Included fasteners:	Socket head cap screws Key way set screws

PERFORMANCE DATA

Maximum Torque Ratings

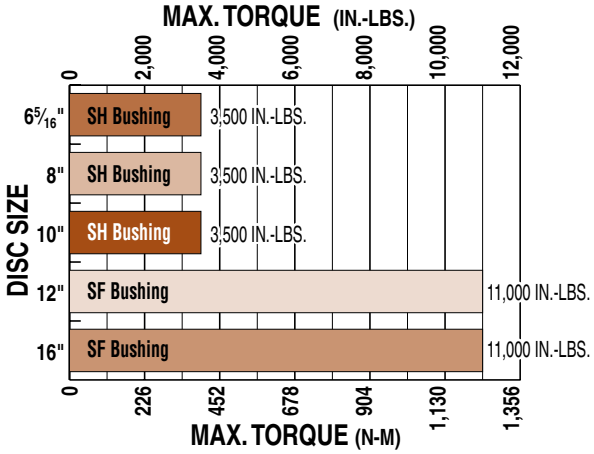

6⅝" DISC

For use with pneumatic, hydraulic, mechanical or spring applied caliper disc brakes

Weight 2.1 lbs. .95 kgs. Disc Thickness: 0.156"

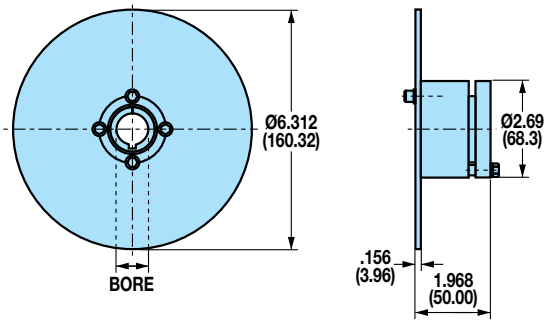

ASSY NO.	BORE	KEY SIZE
0801-0109	.563"	.125" x .125"
0801-0110	.625"	.188" x .188"
0801-0111	.688"	.188" x .188"
0801-0112	.750"	.188" x .188"

ASSY NO.	BORE	KEY SIZE
0801-0114	.875"	.188" x .188"
0801-0115	.938"	.250" x .250"
0801-0116	1.000"	.250" x .250"
0801-0117	1.063"	.250" x .250"

8" DISC

For use with pneumatic, hydraulic, mechanical or spring applied caliper disc brakes

Weight 2.8 lbs. 1.27 kgs. Disc Thickness: 0.156"

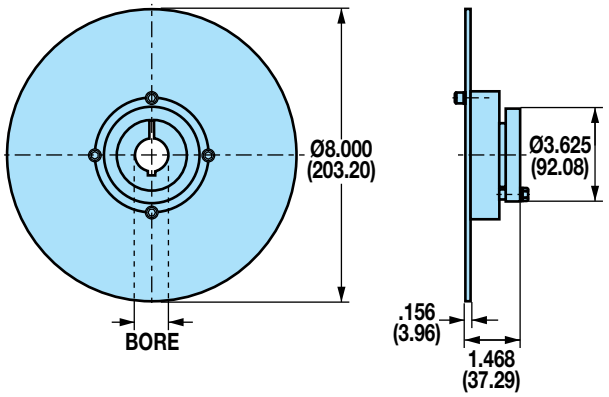

ASSY NO.	BORE	KEY SIZE
0802-0108	.500"	.125" x .125"
0802-0109	.563"	.125" x .125"
0802-0110	.625"	.188" x .188"
0802-0111	.688"	.188" x .188"
0802-0112	.750"	.188" x .188"
0802-0113	.813	.188" x .188"
0802-0114	.875"	.188" x .188"
0802-0115	.938"	.250" x .250"
0802-0116	1.000"	.250" x .250"

ASSY NO.	BORE	KEY SIZE
0802-0117	1.063"	.250" x .250"
0802-0118	1.125"	.250" x .250"
0802-0119	1.188"	.250" x .250"
0802-0120	1.250"	.250" x .250"
0802-0121	1.313"	.313" x .313"
0802-0122	1.375"	.313" x .313"
0802-0123	1.438"	.375" x .250"*
0802-0124	1.500"	.375" x .250"*
0802-0125	1.563"	.375" x .250"*

**NON-STANDARD KEYS ARE SUPPLIED ALONG WITH HUB AND DISC ASSEMBLIES*

10" DISC

For use with pneumatic, hydraulic, mechanical or spring applied caliper disc brakes

Weight 4.1 lbs. 1.86 kgs. Disc Thickness: 0.156"

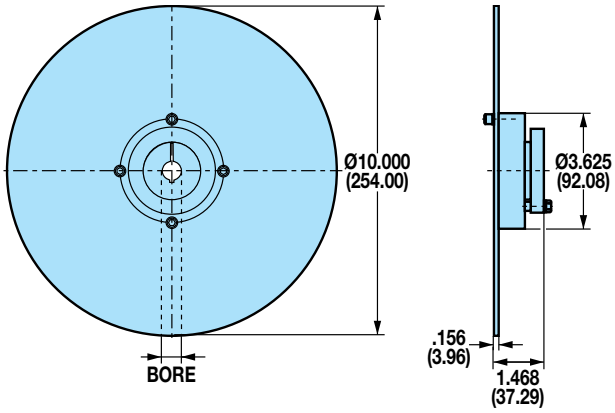

ASSY NO.	BORE	KEY SIZE
0803-0110	.625"	.188" x .188"
0803-0111	.688"	.188" x .188"
0803-0112	.750"	.188" x .188"
0803-0114	.875"	.188" x .188"
0803-0115	.938"	.250" x .250"
0803-0116	1.000"	.250" x .250"
0803-0117	1.063"	.250" x .250"
0803-0118	1.125"	.250" x .250"

ASSY NO.	BORE	KEY SIZE
0803-0119	1.188"	.250" x .250"
0803-0120	1.250"	.250" x .250"
0803-0121	1.313"	.313" x .313"
0803-0122	1.375"	.313" x .313"
0803-0123	1.438"	.375" x .250"*
0803-0124	1.500"	.375" x .250"*
0803-0125	1.563"	.375" x .250"*

12" DISC

For use with pneumatic, hydraulic, mechanical or spring applied caliper disc brakes

Weight 9.3 lbs. 4.22 kgs. Disc Thickness: 0.156"

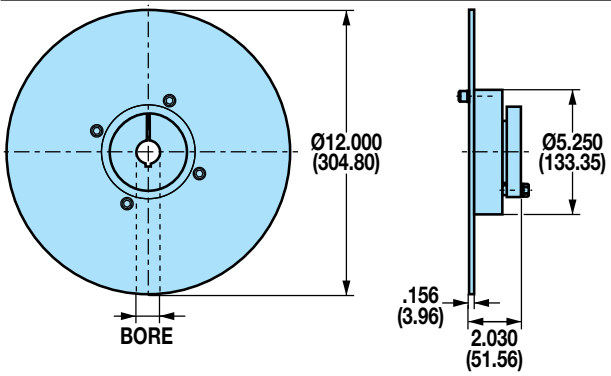

ASSY NO.	BORE	KEY SIZE
0804-0108	.500"	.125" x .125"
0804-0112	.750"	.188" x .188"
0804-0114	.875"	.188" x .188"
0804-0115	.938"	.250" x .250"
0804-0116	1.000"	.250" x .250"
0804-0117	1.063"	.250" x .250"
0804-0118	1.125"	.250" x .250"
0804-0119	1.188"	.250" x .250"
0804-0120	1.250"	.250" x .250"
0804-0121	1.313"	.313" x .313"
0804-0122	1.375"	.313" x .313"
0804-0123	1.438"	.375" x .375"
0804-0124	1.500"	.375" x .375"
0804-0125	1.563"	.375" x .375"
0804-0126	1.625"	.375" x .375"
0804-0127	1.688"	.375" x .375"

ASSY NO.	BORE	KEY SIZE
0804-0128	1.750"	.375" x .375"
0804-0130	1.875"	.500" x .500"
0804-0131	1.938"	.500" x .500"
0804-0132	2.000	.500" x .500"
0804-0133	2.063	.500" x .500"
0804-0134	2.125"	.500" x .500"
0804-0135	2.188"	.500" x .500"
0804-0136	2.250"	.500" x .500"
0804-0137	2.313"	.500" x .625"*
0804-0138	2.375"	.500" x .625"*
0804-0139	2.438"	.500" x .625"*
0804-0140	2.500"	.500" x .625"*
0804-0141	2.563"	.375" x .625"*
0804-0142	2.625"	.375" x .625"*
0804-0143	2.688"	.375" x .625"*
0804-0144	2.750"	.375" x .625"*

NON-STANDARD KEYS ARE SUPPLIED ALONG WITH HUB AND DISC ASSEMBLIES

16" DISC

For use with pneumatic, hydraulic, mechanical or spring applied caliper disc brakes

Weight 18.1 lbs. 8.21 kgs. Disc Thickness: 0.250"

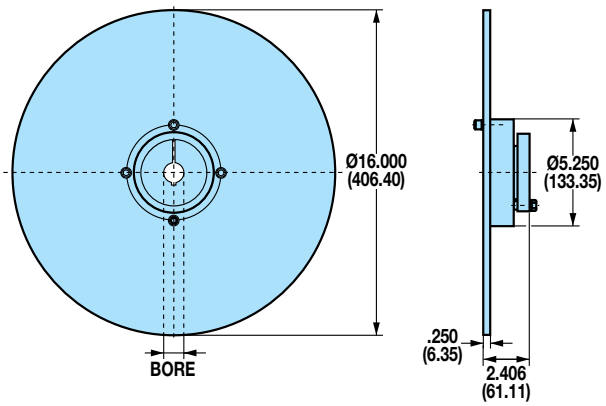

ASSY NO.	BORE	KEY SIZE
0805-0108	.500"	.125" x .125"
0805-0112	.750"	.188" x .188"
0805-0114	.875"	.188" x .188"
0805-0116	1.000"	.250" x .250"
0805-0117	1.063"	.250" x .250"
0805-0118	1.125"	.250" x .250"
0805-0119	1.188"	.250" x .250"
0805-0120	1.250"	.250" x .250"
0805-0121	1.313"	.313" x .313"
0805-0122	1.375"	.313" x .313"
0805-0123	1.438"	.375" x .375"
0805-0124	1.500"	.375" x .375"
0805-0125	1.563"	.375" x .375"
0805-0126	1.625"	.375" x .375"

ASSY NO.	BORE	KEY SIZE
0805-0128	1.750"	.375" x .375"
0805-0130	1.875"	.500" x .500"
0805-0131	1.938"	.500" x .500"
0805-0132	2.000	.500" x .500"
0805-0134	2.125"	.500" x .500"
0805-0135	2.188"	.500" x .500"
0805-0137	2.313"	.500" x .625"*
0805-0138	2.375"	.500" x .625"*
0805-0139	2.438"	.500" x .625"*
0805-0140	2.500"	.500" x .625"*
0805-0141	2.563"	.375" x .625"*
0805-0143	2.688"	.375" x .625"*
0805-0144	2.750"	.375" x .625"*

Caliper Disc Brakes

ORDER ONLINE

QUICK DISCONNECT (Q.D.) BUSHINGS & HUBS

AVAILABLE STYLES

Quick Disconnect (Q.D.) Bushings must be used with Quick Disconnect (Q.D.) Hubs



PICTURED: 0801-1151



PICTURED: 0801-1119

Q.D. BUSHING - 6⅝" DISC (SH)

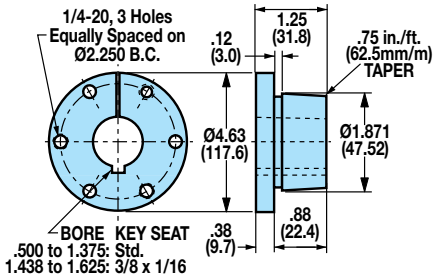

ASSY. NO.	TYPE	BORE	KEY SIZE	WT. (LBS.)	WT. (KGS.)
0801-1123	SH	.563"	.125" x .125"	0.9	.41
0801-1125	SH	.688"	.188" x .188"	0.8	.36
0801-1126	SH	.750"	.188" x .188"	0.8	.36
0801-1127	SH	.813"	.188" x .188'	0.8	.36
0801-1128	SH	.875"	.188" x .188"	0.8	.36
0801-1129	SH	.938"	.250" x .250"	0.8	.36
0801-1131	SH	1.000"	.250" x .250"	0.7	.32
0801-1132	SH	1.063"	.250" x .250"	0.7	.32
0801-1133	SH	1.125"	.250" x .250"	0.7	.32

Q.D. HUB - 6⅝" DISC (SH)

For use with quick disconnect (Q.D.) bushing

0801-1119 Weight 1.2 lbs. .54 kgs.

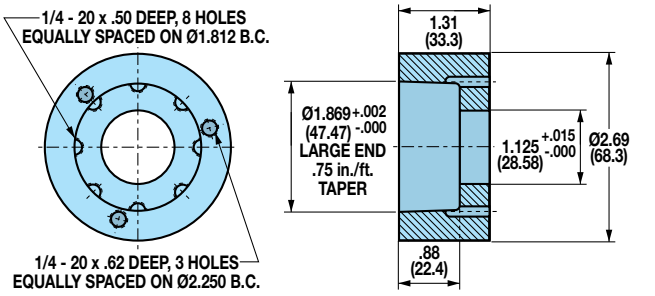

Q.D. BUSHING - 8" & 10" DISC (SH)

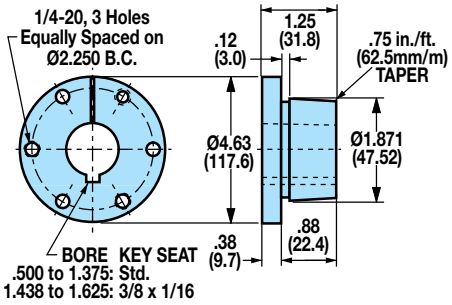

ASSY. NO.	TYPE	BORE	KEY SIZE	WT. (LBS.)	WT.(KGS.)
0801-1122	SH	.500"	.125" x .125"	0.9	.41
0801-1123	SH	.563"	.125" x .125"	0.9	.41
0801-1124	SH	.625"	.188" x .188"	0.9	.41
0801-1125	SH	.688"	.188" x .188"	0.8	.36
0801-1126	SH	.750"	.188" x .188"	0.8	.36
0801-1127	SH	.813"	.188" x .188"	0.8	.36
0801-1128	SH	.875"	.188" x .188"	0.8	.36
0801-1129	SH	.938"	.250" x .250"	0.8	.36
0801-1131	SH	1.000"	.250" x .250"	0.7	.32
0801-1132	SH	1.063"	.250" x .250"	0.7	.32
0801-1133	SH	1.125"	.250" x .250"	0.7	.32
0801-1134	SH	1.188"	.250" x .250"	0.6	.27
0801-1135	SH	1.250"	.250" x .250"	0.6	.27
0801-1136	SH	1.313"	.313" x .313"	0.5	.23
0801-1137	SH	1.375"	.313" x .313"	0.5	.23
0801-1138	SH	1.438"	.375" x .250"*	0.5	.23
0801-1139	SH	1.500"	.375" x .250"*	0.4	.18
0801-1140	SH	1.563"	.375" x .250"*	0.4	.18
0801-1141	SH	1.625"	.375" x .250"*	0.4	.18

**NON-STANDARD KEYS ARE SUPPLIED ALONG WITH HUB AND DISC ASSEMBLIES*

Q.D. HUB - 8" & 10" DISC (SH)

For use with quick disconnect (Q.D.) bushing

0802-1137 Weight 1.6 lbs. .73 kgs.

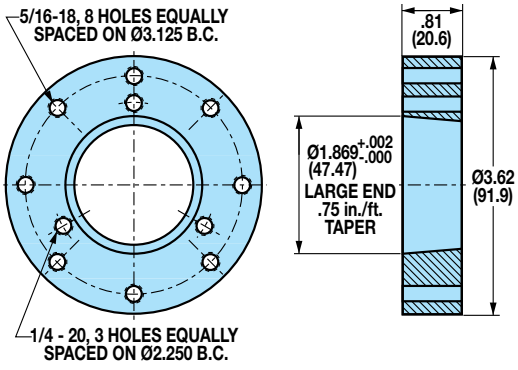

QUICK DISCONNECT (Q.D.) BUSHINGS & HUBS

Q.D. BUSHING INSTALLATION

When a wrench or length of pipe is used to increase leverage in tightening bushing screws, it is imperative to adhere to the wrench torque values given below.

When mounting the bushing, the tightening force on the screws is multiplied many times by the wedging action of the tapered surface. This action compresses the bushing for a snug fit on the shaft. The bushing screws should always be tightened alternately and progressively.

BUSHING	WRENCH TORQUE (IN.-LBS.)	WRENCH LENGTH (INCHES)	WRENCH PULL (POUNDS)
SH	108	4	27
SF	360	6	60

Q.D. HUB - 12" & 16" DISC (SF)

For use with quick disconnect (Q.D.) bushing

0804-1141 Weight 4.70 lbs. 2.13 kgs.

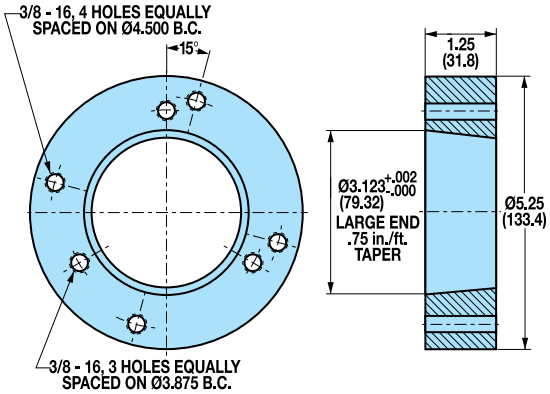

*NON-STANDARD KEYS ARE SUPPLIED ALONG WITH HUB AND DISC ASSEMBLIES

Q.D. BUSHING - 12" & 16" DISC (SF)

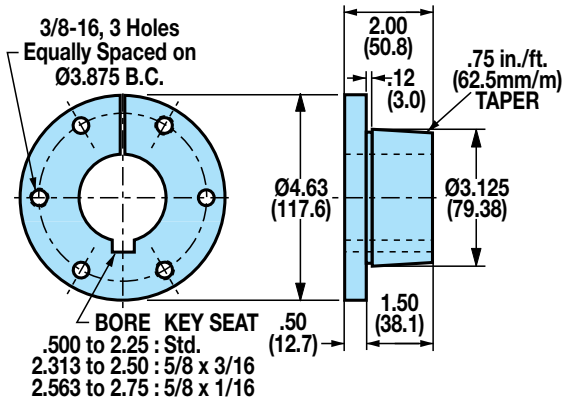

ASSY. NO.	TYPE	BORE	KEY SIZE	WT. (LBS.)	WT. (KGS.)
0801-1142	SF	.500"	.125" x .125"	4.9	2.22
0801-1143	SF	.563"	.125" x .125"	4.9	2.22
0801-1144	SF	.625"	.188" x .188"	4.8	2.18
0801-1145	SF	.688"	.188" x .188"	4.8	2.18
0801-1146	SF	.750"	.188" x .188"	4.8	2.18
0801-1147	SF	.813"	.188" x .188"	4.7	2.13
0801-1148	SF	.875"	.188" x .188"	4.7	2.13
0801-1149	SF	.938"	.250" x .250"	4.6	2.09
0801-1150	SF	1.000"	.250" x .250"	4.6	2.09
0801-1151	SF	1.063"	.250" x .250"	4.5	2.04
0801-1152	SF	1.125"	.250" x .250"	4.5	2.04
0801-1153	SF	1.188"	.250" x .250"	4.4	2.00
0801-1154	SF	1.250"	.250" x .250"	4.4	2.00
0801-1155	SF	1.313"	.313" x .313"	4.3	1.95
0801-1156	SF	1.375"	.313" x .313"	4.2	1.91
0801-1157	SF	1.438"	.375" x .375"	4.1	1.86
0801-1158	SF	1.500"	.375" x .375"	4.0	1.81
0801-1159	SF	1.563"	.375" x .375"	4.0	1.81
0801-1160	SF	1.625"	.375" x .375"	3.9	1.77
0801-1161	SF	1.688"	.375" x .375"	3.8	1.72
0801-1162	SF	1.750"	.375" x .375"	3.7	1.68
0801-1163	SF	1.875"	.500" x .500"	3.5	1.59
0801-1164	SF	1.938"	.500" x .500"	3.4	1.54
0801-1165	SF	2.000"	.500" x .500"	3.3	1.50
0801-1166	SF	2.063"	.500" x .500"	3.2	1.45
0801-1167	SF	2.125"	.500" x .500"	3.1	1.41
0801-1168	SF	2.188"	.500" x .500"	3.0	1.36
0801-1169	SF	2.250"	.500" x .500"	2.9	1.32
0801-1170	SF	2.313"	.500" x .625"*	2.9	1.32
0801-1171	SF	2.375"	.500" x .625"*	2.8	1.27
0801-1172	SF	2.438"	.500" x .625"*	2.7	1.22
0801-1173	SF	2.500"	.500" x .625"*	2.6	1.18
0801-1174	SF	2.563"	.375" x .625"*	2.4	1.09
0801-1175	SF	2.625"	.375" x .625"*	2.3	1.04
0801-1176	SF	2.688"	.375" x .625"*	2.2	1.00
0801-1177	SF	2.750"	.375" x .625"*	2.0	.91
0801-1178	SF	2.812"	NONE	1.8	.82
0801-1179	SF	2.937"	NONE	1.5	.68

Caliper Disc Brakes

ORDER ONLINE

ONE-PIECE HUB AND DISC

AVAILABLE STYLES

One-Piece Hub and Disc



PICTURED: 0801-1210

ONE-PIECE HUB & DISC SPECIFICATIONS

Disc material:	Grey cast iron (G3000)
Disc manufacturing details:	Flat within .010 inch, 80 (RMS) micro-inch finish
Included fasteners:	none

6" DISC

For use with pneumatic, hydraulic, mechanical or spring applied caliper disc brakes

Weight 1.8 lbs. .82 kgs. Disc Thickness: 0.187"

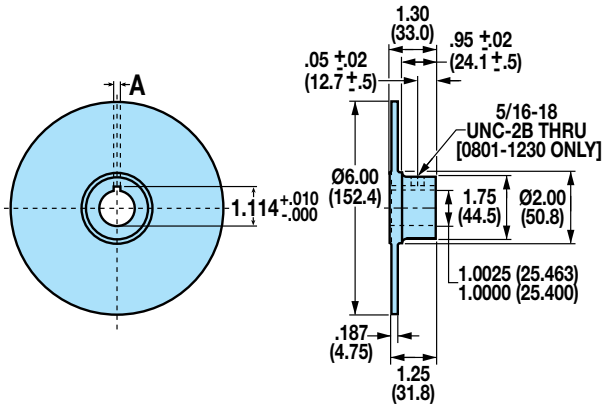

ASSY. NO.	BORE	KEY SIZE	DIM "A"
0801-1210	1.000"	.188" x .188"	.190" / .188"
0801-1230	1.000"	.25" x .125"	.253" / .251"

BLANK DISC

AVAILABLE STYLES

Blank Disc



PICTURED: 0801-1200

BLANK DISC SPECIFICATIONS

Disc material:	SAE 1010-1020 CRS
Disc manufacturing details:	Flat within .010 inch, 80 (RMS) micro-inch finish
Included fasteners:	none

6 5/16", 8", 10", 12" & 16" DISCS

For use with pneumatic, hydraulic, mechanical or spring applied caliper disc brakes

NO DIMENSIONAL DRAWING REQUIRED

ASSY. NO.	DISC DIAMETER	DISC THICKNESS	WT. (LBS.)	WT. (KGS.)
0801-1200	6.313"	.156"	1.3	.59
0802-1200	8.000"	.156"	2.2	1.00
0803-1200	10.000"	.156"	3.4	1.54
0804-1200	12.000"	.156"	4.8	2.18
0805-1200	16.000"	.250"	13.7	6.21

DISC WITH BOLT CIRCLES & PILOT HOLE

AVAILABLE STYLES

Disc with Bolt Circles & Pilot Hole



PICTURED: 0801-1208

DISC SPECIFICATIONS

Disc material:	SAE 1010-1020 CRS
Disc manufacturing details:	Flat within .010 inch, 80 (RMS) micro-inch finish
Included fasteners:	none

6⁵⁄₁₆", 8", 10", 12" & 16" DISCS

For use with pneumatic, hydraulic, mechanical or spring applied caliper disc brakes

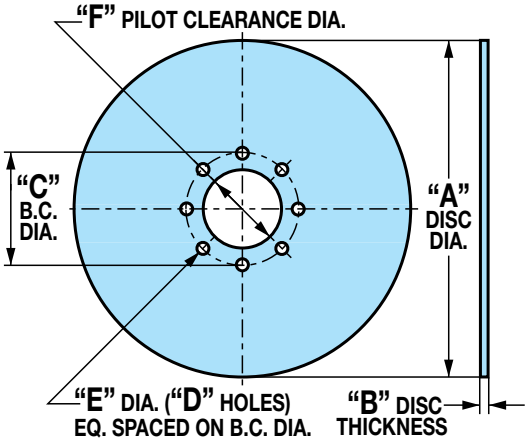

ASSEMBLY NUMBER	"A" DISC DIA.	"B" DISC THK	"C" B.C. DIA.	"D" NO. OF BOLT HOLES	"E" HOLE DIA.	"F" PILOT CLEAR. DIA.
0801-1206	6.313"	.156"	1.812"	8	.332"	1.376"
0802-1208	8.000"	.156"	3.125"	8	.343"	2.375"
0803-1210	10.000"	.156"	3.125"	8	.343"	2.375"
0804-1212	12.000"	.156"	4.500"	4	.406"	3.750"
0805-1216	16.000"	.250"	4.500"	4	.406"	3.750"
0805-1220	16.000"	.500"	4.500"	4	.406"	3.750"

INTENSIFIER

AVAILABLE STYLES

Intensifier



PICTURED: 1770-0000

NOTE: NOT FOR USE WITH SPRING APPLIED OR SPRING RETRACTING CALIPER DISC BRAKES

INTENSIFIER SPECIFICATIONS

INPUT:	Pneumatic pressure, maximum:	100 PSI
	Piston seal:	U-cup design
	Cylinder material:	Hard coated aluminum
	Input to output ratio:	1 : 10
OUTPUT:	Hydraulic pressure, maximum:	1,000 PSI
	Hydraulic fluid displacement:	0.44 in^3
	Cylinder seal:	O-ring, Buna-N
	Cylinder material:	Aluminum
	1/8 NPT Port:	Standard, for oil reservoir and/or pressure gauge

Options:

Hydraulic cylinder seal:	O-ring, EPR
Hydraulic cylinder seal:	O-ring, Viton®

INTENSIFIER KIT

For use with non-spring retracting hydraulic caliper disc brakes, Tolomatic series: H10, H20, H/ME20, H220, H/ME220

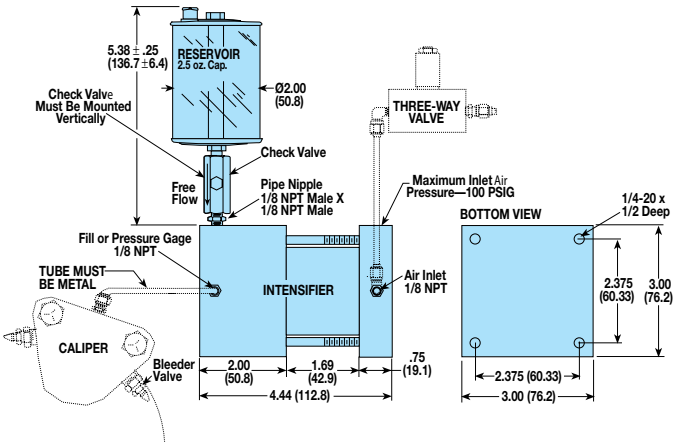

ASSEMBLY NUMBER	SEAL TYPE	KIT INCLUDES:	INTENSIFIER NUMBER
1770-0002	Buna-N	Intensifier, reservoir, check valve & pipe nipple	1770-0000
1770-0003	EPR	Intensifier, reservoir, check valve & pipe nipple	1770-0001
1770-0004	Viton®	Intensifier, reservoir, check valve & pipe nipple	1770-0005

Caliper Disc Brakes

ORDER ONLINE

TENSION CONTROL COMBINATIONS

AVAILABLE STYLES

Ventilated Disc

FIXED MOUNT - FIXED DISC



PICTURED: 0803-1214

DISC PERFORMANCE DATA

Thermal Dissipative Capacity of Ventilated Disc

(BASED ON A MAXIMUM DISC TEMPERATURE OF 375°F AND AN AMBIENT TEMPERATURE OF 75°F)

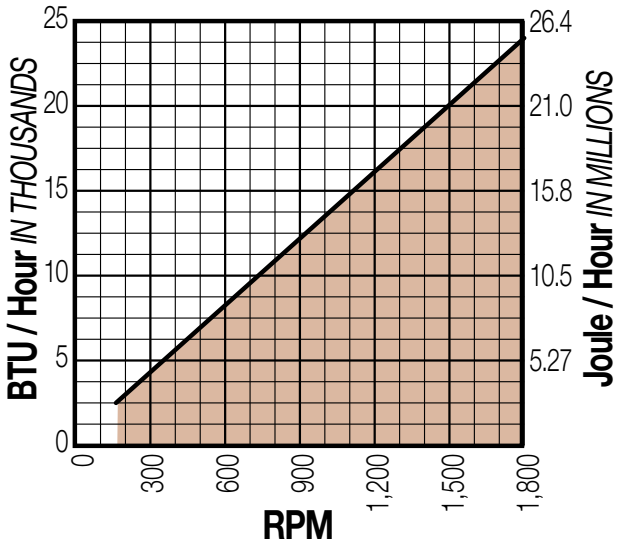

11" DISC

For use with hydraulic caliper disc brakes

Weight 15.4 lbs. 6.99 kgs. Disc Thickness: 1.20"

SEE CALIPER & DISC DRAWING AT RIGHT FOR DISC DIMENSIONS

ASSY. NO.	DESCRIPTION	COMPONENTS INCLUDED
0803-0202	Ventilated Disc Assembly	Ventilated Disc, Pilot Plate HHCS (1/2"-13 x 1-1/2")[5], Lockwashers [5]

PERFORMANCE DATA

PERFORMANCE DATA GRAPHS ARE REPEATED FROM: *PAGE 36 - PNEUMATIC* *PAGE 42 - HYDRAULIC*

P220 CALIPER

Dynamic Torque vs Pressure

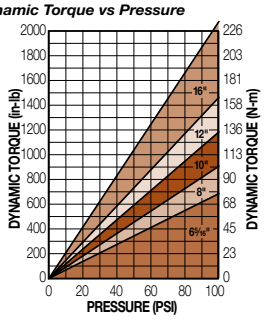

H220 CALIPER

Dynamic Torque vs Pressure

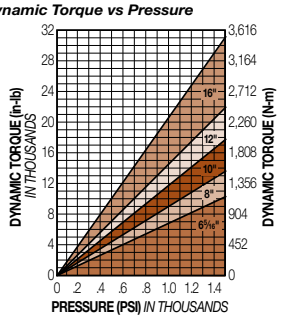

Static Torque vs Pressure

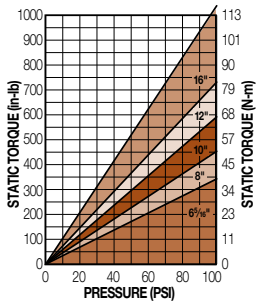

Static Torque vs Pressure

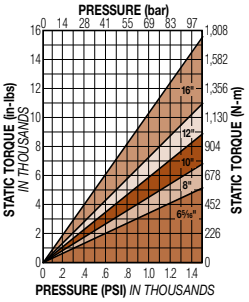

CALIPER & DISC

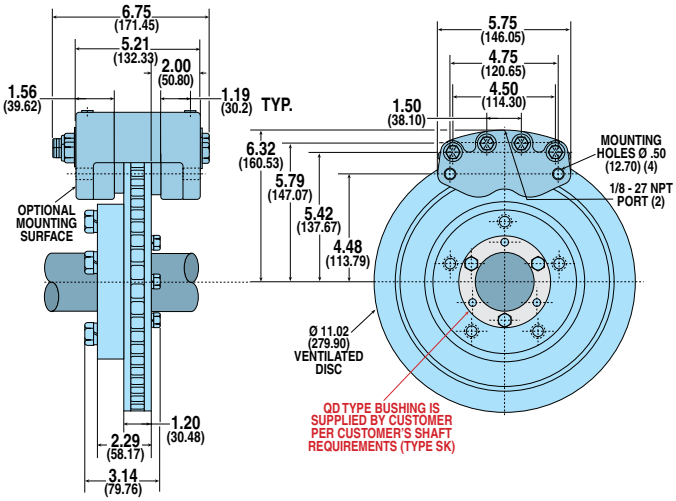

Calipers for Ventilated Disc

ASSY. NO.	MODEL CODE	DESCRIPTION
0735-0304	P220DX	Pneumatic, Double Acting
0735-0704	P220DX	Pneumatic, Double Acting w/Segmented Pucks
0735-0312	H220DXC	Hydraulic, Double Acting w/Bleeder Fittings

DISC SIZING EQUATIONS

DYNAMIC TORQUE (IN.-LBS.) = 2.88 x BRAKING RADIUS (IN.) x PRESSURE (PSI)
STATIC (PARKING) TORQUE (IN.-LBS.) = 1.44 x BRAKING RADIUS (IN.) x PRESSURE (PSI)

BRAKE MODEL LETTER CODES

C w/ bleeder fittings	**H** Hydraulic	**X** Non-standard Disc Thickness
D Dual Acting	**P** Pneumatic	

SELECTION: GENERAL

HOW CALIPER DISC BRAKES WORK

Basically, a caliper disc brake functions like an ordinary rod cylinder. Components consist of a piston, a puck (or pad) of wearable friction material, a housing, and opposing side and a disc on which the brake acts. When pressure is applied to the piston, the puck is moved into contact with the disc, causing the disc to stop rotating or, in a tensioning application, to supply constant drag. The housing contains the piston and puck and is located above the disc. There are always two sides to a caliper disc brake: One is known as the "live side" with the piston and puck; the other may be either another "live side" or it may be a "dead side" (another puck which contacts the disc when the "live side" piston is actuated).

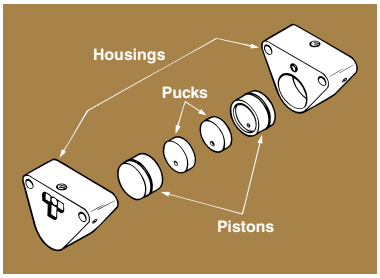

Disc brakes are widely used in three areas: Stopping, retarding (tensioning) and holding. In any application it is necessary to determine how much torque is required, how much heat will be generated (and thus, to be dissipated) and the anticipated service life of the linings. Once these variables are determined, then find the combination of disc and caliper that will most economically meet these requirements.

DETERMINE THE KIND OF BRAKING TO BE DONE

- Industrial
  - Tensioning
  - Constant Slip)
- Vehicular

DETERMINE PRESSURE (LEVER FORCE) AVAILABLE

All torque calculations (except for spring applied brakes) are based on the pressure (lever force) available for your application. Maximum pneumatic pressure for Tolomatic caliper disc brakes is 100 PSI. Maximum hydraulic pressure varies by model between 1,000 PSI and 2,000 PSI. Maximum lever force for mechanical brakes varies with model and lever length. Refer to individual models for pressure (lever force) ratings.

CALCULATE THE TORQUE REQUIRED

For convenience, we express the torque formulae separately for industrial applications, vehicular applications and tensioning applications. See the formulae section (pages 88-91) to determine the torque needed for your application.

CALCULATE HEAT DISSIPATION REQUIRED

The energy generated will either be expressed as BTU per hour (particularly for tensioning applications) or BTU per stop. The formulae for calculating these values are different for industrial, tensioning and vehicular braking. See the formulae section (pages 88-91) to determine the heat generated for your application.

DETERMINE MAXIMUM DISC DIAMETER

There are two criteria to determine disc diameter:

- ***ENVELOPE SIZE*** – how much room is allowed in the design for disc and caliper. This affects the braking radius and thus the torque that the caliper can develop.
- ***HEAT DISSIPATION REQUIRED*** – Cycle rate and torque are needed to determine the heat an application will generate per hour, and thus the heat that the disc will need to dissipate. Discs will normally dissipate heat at the rate of 3 BTU per hour, per square inch of disc area. This assumes a disc temperature of 220° F above ambient temperature of 80°F. Discs rotating at extreme speeds may dissipate heat at rates as high as 5 BTU per hour, per square inch of disc area. If required torque, cycle rate and small envelope size combine to create heat dissipation requirements that are greater than standard disc capabilities, your choices are:
  1.) Use a thicker disc (that will act as a heat sink).
  2.) Use multiple discs/calipers for the application.
  3.) Use a ventilated disc (to increase the heat dissipation rate).
  4.) Cool disc with forced air (to increase the heat dissipation rate).

DETERMINE THE TYPE OF BRAKE ACTUATION

Choose a brake based on the type of actuation available (pneumatic, hydraulic, etc.) and whether dynamic or static braking is required for the application.

Tolomatic offers brakes actuated in 5 different ways:

- ***PNEUMATIC***

  Pneumatic actuation is used in industrial and tensioning applications because pneumatic service is easily controllable and readily available in most industrial settings.

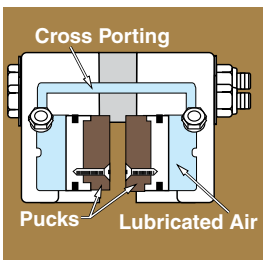

Caliper Disc Brakes ORDER ONLINE

SELECTION: GENERAL

- ***HYDRAULIC***

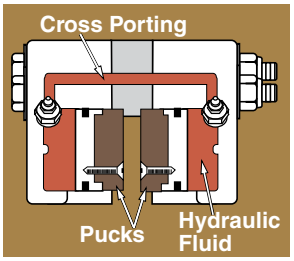

Hydraulic actuated brakes are normally used in applications where higher torque output is needed. They may be operated with a variety of fluids including the standard mineral based hydraulic oils, automotive brake fluids and non-flammable phosphate ester fluids (each requires different seals).

- ***MECHANICAL***

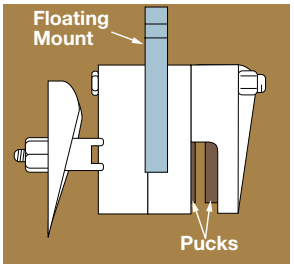

Mechanically actuated brakes are often used for emergency stopping or holding brakes or in situations where pneumatic or hydraulic pressure is not available. Mechanical caliper disc brakes operate when the cam lever is rotated. This pushes the actuating pins against the lining's backing plate thus forcing the lining into the disc.

- ***HYDRAULIC / MECHANICAL COMBOS***

Combination brakes give the added flexibility to apply mechanical braking as well as hydraulic braking from one caliper.

- ***SPRING APPLIED***

These brakes require pressure (normally hydraulic) to release it from the disc. Braking force is provided by a stack (or stacks) of Belleville spring washers. The conical washers are capable of storing enormous force. When the brake is pressurized the force moves a piston(s) to compress the spring washer stack(s), thus releasing the disc.

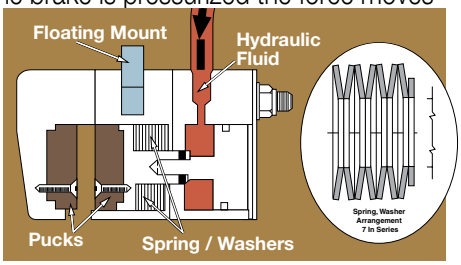

Because the force applied by the spring stack is reduced as the spring washers expand, spring applied brakes are used mainly for applications that require occasional stopping or holding. They should not be used in tension-constant slip applications or cyclic stopping industrial applications.

CHOOSE TOLOMATIC BRAKE SIZE

Tolomatic brakes are grouped by size. These sizes relate to the piston size for each brake. Because maximum pressure (lever force) generated differs between the type of brake (pneumatic, hydraulic, etc.), the maximum torque available differs. The graphs on pages 29 to 31 will be helpful in determining the approximate brake size that will work for your application. Go to each individual brake section to find the equations and performance graphs for that brake.

For easy reference, torque output equations that apply to each series of brake are shown at the bottom of the page (see example below). Each equation features:
[1.] a constant value *(A product of brake piston area, the coefficient of friction and a safety factor.)*, multiplied by
[2.] braking radius *(Common disc sizes appear on the page with the dimensional drawing.)*, multiplied by
[3.] pressure (lever force) *(You will need to determine.)*.

DISC SIZING EQUATIONS (1) (2) (3)

STATIC (PARKING) TORQUE (IN.-LBS.) = 6.99 X BRAKING RADIUS (IN.) X LEVER FORCE (LBS.)

BRAKING RADIUS (IN.) = [DISC DIAMETER ÷ 2] - 0.688

The performance data graphs represent these equations for common disc sizes in a convenient, visual way to quickly see how well each brake size will fit your application.

CHOOSE DOUBLE ACTING OR SINGLE ACTING BRAKE

Double Acting

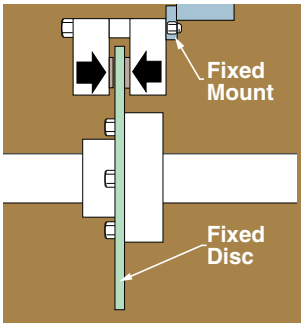

- Double acting brakes feature two "live sides". Each side has a piston that actuates the lining, forcing it against the disc. Hydraulic and pneumatic brakes are available in double acting as well as single acting models.

Single Acting

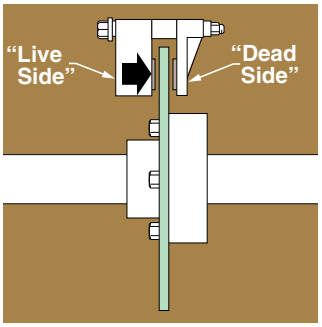

- Single acting brakes have a piston that actuates the lining on the "live side", forcing it against the disc. The "dead side" has a stationary lining attached to the housing. Since only one side has a moving piston, the brakes mounting must allow it to float. Spring applied, mechanical and hydraulic/mechanical brakes are generally single acting.

SELECTION: GENERAL

DETERMINE MOUNT FOR BRAKE AND DISC

- ***For Double Acting Brakes***

FIXED CALIPER MOUNT/ FIXED DISC – A double acting caliper can be fixed mounted since both linings have pistons to move them. The disc is also fixed mounted.

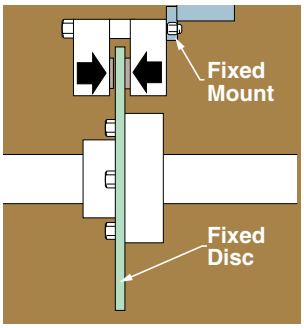

- ***For Single Acting Brakes***

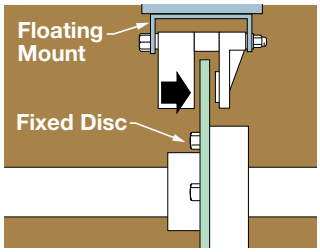

FLOATING CALIPER MOUNT/FIXED DISC – A floating mount bracket permits the caliper to shift position when braking force is applied. The disc is rigidly mounted to the shaft.

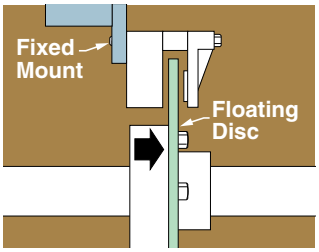

FIXED CALIPER MOUNT/ FLOATING DISC – The caliper is rigidly mounted and a floating disc mount attaches the disc to the shaft. The two forms of floating disc are: ***1.)*** Disc and hub are mounted on a spline on the shaft. ***2.)*** Hub is rigidly keyed to the shaft and the disc is spring loaded to the hub, providing floating ability.

CONSIDER OPTIONS

Hydraulic brakes may operate with a variety of fluids. Tolomatic brakes use Buna-N seals most commonly. These seals are suited for use with standard mineral based hydraulic oil. EPR seals, for use with automotive brake fluids, are available for most Tolomatic brakes. Some models also give you the choice of Viton® seals, these seals are suited for use with nonflammable phosphate ester fluids.

Some Tolomatic brakes are available with retractable pistons. A brake with this feature has a small compression spring within the piston which causes it to retract from the disc when pressure is released. Retractable brakes are used in applications that require a brake with absolutely no residual drag from the linings on the disc. Retractable brakes have reduced capable travel due to the added spring components. This results in a decreased in wearable friction material compared to non-retractable models.

Almost all Tolomatic brakes can be modified to fit a variety of disc thicknesses.

NOTE: TOLOMATIC RETRACTABLE BRAKES SHOULD NOT BE USED IN VEHICULAR APPLICATIONS WITH A MASTER CYLINDER OR WITH AN INTENSIFIER.

DETERMINE LIFE EXPECTANCY OF LININGS

Another consideration in selecting a brake is the life expectancy of the linings. This factor is particularly important if the brake is to be placed in a “hard-to-service” location, faces long intervals between servicing, or is to be used in a tensioning-constant slip application.

Basically, lining life expectancy is a factor of the amount of energy transmitted through the lining and may be measured in total number of stops or hours of life. Both measurements may be reduced to horsepower hours of heat that the lining must endure.

Tolomatic’s standard lining is made of a non-asbestos organic material and has a maximum operating temperature of 300°F. See the formulae section to determine the lining life expectancy for your application.

Caliper Disc Brakes

ORDER ONLINE

SELECTION: FORMULAE: INDUSTRIAL

INDUSTRIAL APPLICATIONS FORMULAE

Calculation of Torque Required

Many industrial applications are concerned with rotary motions that must be brought to rest in a specified time. The torque necessary to satisfy the time requirement must be determined. A convenient formula used to calculate the torque requirement of a single shaft system is:

$$T = \frac{WK^2N}{308t} \quad [1a]$$

Where: **T** = Torque; ft-lbs

W = Weight of rotating member; lbs.

K = Radius of gyration of rotating member; ft.

N = Speed of rotating shaft; rpm

t = Stopping time required; seconds

or: $$T = \frac{WK^2N}{3,696t} \quad [1b]$$

Where: **T** = Torque; in-lbs

K = Radius of gyration of rotating member; in.

Industrial applications often consist of more than one rotating mass system (i.e., two or more shafts with gears, sheaves, drums, etc.) interconnected and operating at different speeds. In such systems the rotating elements must be reduced to a common base. Since the energy of a rotating mass system is a function of the square of its speed, an equivalent WK^2 of each rotating member relative to the shaft on which the brake disc is mounted can be calculated using the formulae in the Radius of Gyration Section (page 89).

Calculation of Heat Generation and Required Dissipation (Industrial)

Heat is always developed in the disc and linings of a brake when a rotating or moving body comes to rest. The kinetic energy in BTUs per stop may be expressed in the following formulae:

$$BTU/Stop = \frac{WK^2N^2}{4,570,000} \quad \text{for a single shaft system} \quad [4]$$

$$BTU/Stop = \frac{WK_e^2N_s^2}{4,570,000} \quad \text{for a multiple shaft system} \quad [5]$$

or

$$BTU/Stop = \frac{\pi TN_S t}{46,680} \quad [6]$$

Where: **T** = Torque; ft-lbs

K = Radius of gyration of rotating member; ft.

The weight and specific heat of the lining material is very small compared to the disc and can be ignored.

Since the amount of heat dissipated per hour by the disc at a given temperature above ambient is considered as being directly proportional to the exposed area of the disc, disc thickness should be kept small. Standard thicknesses are 5/32" and 1/4".

For the best service life the disc temperature should not exceed 300°F. Higher disc temperatures can be allowed, however, there will be a reduction in the life of the friction material. See Figure 1 (page 90).

In many applications there are no restrictions to disc diameter (within reason). Convert your calculated BTU/ Stop to BTU/hr. with the following formula:

$$BTU/hr. = (BTU/stop)(stops/hr.) \quad [7]$$

Then solve for the number of square feet of exposed disc area to dissipate the heat generated:

$$Sq.\ Ft.\ Disc\ Area = \frac{BTU/hr}{660} \quad [8]$$

Refer to Table 1 (page 90) for selection of proper disc diameter.

NOTE: THE ABOVE FORMULA [8] IS BASED ON A 220°F TEMPERATURE RISE AND AN 80°F AMBIENT TEMPERATURE. IF A HIGHER DISC TEMPERATURE IS DESIRED REFER TO FORMULAE [14], [15], [16] IN THE TENSIONING-CONSTANT SLIP SECTION.

If there is a restriction in the disc diameter(s) and there is sufficient time between stops or multiple of stops for heat dissipation then we can size the disc to act as a heat sink.

$$Wd = \frac{BTU/hr.}{(220)(Sp)} \quad [9]$$

Where: **Wd** = Weight of disc; lbs.

Sp = Specific heat of disc may be taken as .12 for steel; BTU/lbs.-°F

Refer to Table 1 (page 90) for selection. If your requirement falls outside of the standard(s) you may calculate the required thickness based on the maximum allowable diameter:

$$\text{Disc Thickness} = \frac{Wd}{(A)(.28)} \quad [10]$$

Where: Thickness is in inches

A = Area of maximum allowable diameter; in^2

If it is found the disc thickness is unrealistic from an economic or space limitation standpoint, multiple discs will have to be provided or forced ventilation must be considered.

SELECTION: FORMULAE: RADIUS OF GYRATION, TENSIONING

RADIUS OF GYRATION FORMULAE

Radius of Gyration for Geometric Forms

Radius of gyration is the distance from the center of rotation at which the entire rotating mass could be concentrated and still be equivalent to the actual distributed mass.

Solid Cylinder About its Own Axis

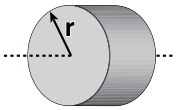

$$k^2 = \frac{r^2}{2}$$

Hollow Cylinder About its Own Axis

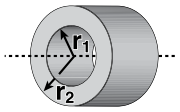

$$k^2 = \frac{r_1^2 + r_2^2}{2}$$

Where: **K = Radius of gyration of rotating member; ft.**

R = Radius of rotating member; ft.

$$WK_e^2 = WK_S^2 + WK_1^2\left[\frac{N_1}{N_S}\right]^2 + \ldots \qquad [2]$$

Where: WK_e^2 = Equivalent WK^2 of the multiple shaft system; lbs-ft^2

WK_s^2 = WK^2 of the shaft assembly on which the brake disc is mounted; lbs-ft^2

WK_1^2 = WK^2 of the second shaft assembly; lbs-ft^2

N_s = speed of the shaft on which the brake disc is mounted; rpm

N_1 = speed of the second shaft; rpm

The formula for the torque required to bring the multiple shaft system to rest then becomes:

$$T = \frac{WK_e^2 N_s}{308t} \qquad [3a]$$

Where: T = Torque; ft-lbs

or $$T = \frac{WK_e{}^2 N_s}{3{,}696t} \qquad [3b]$$

Where: T = Torque; in-lbs (WK_e^2 is in lbs-in^2)

TENSIONING / CONSTANT SLIP APPLICATIONS FORMULAE

Calculation of Torque Required

Applications involving tensioning or constant drag require a different set of formulae since there is not a finite time to stop. Tensioning devices are designed to operate over an infinite period of time. The basic formula for calculating torque for web tensioning is:

$$T = (L)(F)(R) \qquad [11]$$

Where: **T = Torque; in-lbs**

L = web width, in.

F = tension; lbs./inch of web width

R = maximum roll radius; in.

The basic formula for calculating BTUs generated per hour is:

$$BTU/hr. = \frac{(T)(rpm)}{24.75} \qquad [12]$$

Calculation of Heat Generation and Required Dissipation (Tensioning)

In tensioning applications the amount of heat generated must be dissipated as well. Often web velocity is given in fpm, this can be converted to rpm by:

$$rpm = \frac{fpm}{C} \qquad [13]$$

Where: **C = Circumference of roll at maximum diameter; ft.**

Therefore to solve for the sq. ft. of surface area of the disc(s):

$$Sq.\ Ft.\ Disc\ Area = \frac{BTU/hr}{660} \qquad [14]$$

The constant of 660 is based on a maximum disc temperature of 300°F.

To develop a constant for higher disc temperature:

$$Constant = (3)(\text{temperature rise above ambient}) \qquad [15]$$

The actual disc temperature becomes:

$$\text{Disc Temperature} = \text{Temperature Rise} + \text{Ambient, °F} \qquad [16]$$

Refer to Table 1. Select disc or discs equal to (or greater than) calculated sq. ft. Remember the higher the disc temperature the lower the life of the friction material. See Figure 1 (page 90).

Caliper Disc Brakes

ORDER ONLINE

SELECTION: LINING LIFE

LINING LIFE FORMULAE

Calculating Service Life of Lining(s)

The lining life per cubic inch shown by Figure 1 below is based on horsepower hours.

FIGURE 1 – LINING MATERIAL LIFE

(REPLACEABLE HIGH GRADE FRICTION MATERIAL - NON-ASBESTOS, ORGANIC)

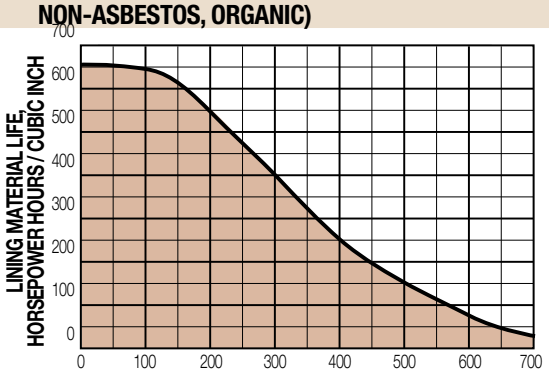

To find the life in hours of lining(s):

(Primarily for tensioning-constant slip applications)

$$\text{Ft-lbs/hr} = (\text{BTU/hr generated})(778) \quad [17]$$

Refer to Formula [12]

$$\text{HP hrs/hr} = \frac{\text{ft - lbs/hr}}{1{,}980{,}000} \quad [18]$$

Refer to Table 2 to determine cubic inches of wearable material of various caliper sizes.

$$\text{Life in Hours} = \frac{(\text{number of calipers})(\text{cubic in. } \textit{Table 2})(\text{HP hrs./in}^3\ \textit{Figure 1})}{\text{HP hrs. / hr.}} \quad [19]$$

To find the life of lining(s) in stops: When a rotating mass is brought to rest, the kinetic energy removed can be calculated by the following formulae:

$$E = \frac{\pi TNt}{60} \quad [20]$$

or

$$E = \frac{WK^2N^2}{5872} \quad [21]$$

Where: E = Kinetic Energy; ft-lbs

$$\text{HP hrs./Stop} = \frac{E}{1{,}980{,}000} \quad [22]$$

$$\text{Life in Stops} = \frac{(\text{number of calipers})(\text{cubic in. } \textit{Table 2})(\text{HP hrs./in}^3\ \textit{Figure 1})}{\text{HP hrs. / Stop}} \quad [23]$$

*LINING LIFE CALCULATIONS ARE **ESTIMATES** AND DO NOT ACCOUNT FOR FOREIGN CONTAMINANTS THAT MAY ABRADE THE LINING OR DISC AND REDUCE LIFE. WHEN THE LIFE MUST BE KNOWN ACCURATELY, FIELD TESTS SHOULD BE CONDUCTED UNDER ACTUAL OR SIMULATED SERVICE CONDITIONS.*

TABLE 1 – DISC SPECIFICATIONS

DISC DIAMETER	EXPOSED AREA IN²	SQ. FT.	SQ MM	WEIGHT* LBS.	KGS.	MAXIMUM BTU / HR.	MAXIMUM JOULE/HR.
6.313	62.58	0.43	40,374	1.37	0.62	283.8	299,360
8.000	100.53	0.70	64,858	3.52	1.60	462.0	487,329
10.000	157.08	1.09	101,342	5.46	2.48	719.4	758,842
12.000	226.20	1.57	145,935	7.91	3.59	1,036.0	1,092,799
16.000	402.12	2.79	259,432	14.06	6.38	1,841.4	1,942,356

**BASED ON A STEEL DISC 1/4" THICK*
(EXCEPT FOR Ø6.313 WHICH IS BASED ON A STEEL DISC 5/32" THICK).

TABLE 2 – CUBIC INCHES OF WEARABLE FRICTION MATERIAL

CALIPER SERIES	CUBIC INCHES
10	.46
20	.83
H220 Aluminum	1.66
H220 Cast Iron	2.35

CALIPER SERIES	CUBIC INCHES
FS220 Aluminum	1.66
FS220 Cast Iron w/ JK options	2.35
H440	3.32

SERIES	INCHES
FS440	1.75
H441	3.71
FS595	4.57
H960	8.00
MB3	6.06

CALIPER CUBIC

TABLE 3 – CAM TRAVEL DATA

ME10 and ME20 Calipers

1. 15° maximum travel when linings are new and with 1/32" gap each side of disc.
2. Periodic tightening of lock nut will reduce travel of lever and will allow 1/4" wear on each lining.
3. 90° maximum travel after 3/16" wear on each lining without intermediate tightening of lock nut.

ME220 Calipers

1. Gap between lining faces and disc when new = .048" total.
2. Angular movement required to actuate brake when new = 7° 30".
3. Maximum axial movement without intermediate adjustment = .387".
4. Wear allowed before adjustment .104" each side.

MB3 Calipers

1. 0° travel with .500" disc.
2. 90° maximum travel after .125" wear on each side of lining without intermediate tightening of the lock nut.

SELECTION: FORMULAE: VEHICULAR

VEHICULAR APPLICATIONS FORMULAE

Calculation of Torque Required

$$\textit{Dynamic}\ T = \frac{WR\left[\frac{a}{g} + \frac{b}{100}\right]}{(D)} \qquad [24]$$

Where:

- **T** = Torque perAxle, vehicle, or wheel; in-lbs
- **W** = Weight on axle including weight transfer, if any, vehicle or wheel; lbs.
- **R** = Loaded tire radius; in.
- **g** = 32.2 ft./sec^2
- **b** = % of grade
- **D** = Gear Reduction, if drive line mounted
- **a** = Deceleration rate; ft/sec^2

And

$$a = \frac{V}{t} = \frac{V^2}{2S} \qquad [25]$$

Where:

- **V** = Velocity of vehicle, ft./sec., at moment of brake application
- **t** = Stopping time required; seconds
- **S** = Stopping distance of vehicle; ft.

$$\textit{Parking}\ T = \frac{WR\left[\frac{b}{100}\right]}{D} \qquad [26]$$

Calculation of Heat Generation and Required Dissipation (Vehicular)

$$E = \frac{WV^2}{2g} \qquad [27]$$

Where:

- **E** = Kinetic Energy; ft-lbs
- **W** = Weight of axle, vehicle, or wheel; lbs.
- **V** = Design speed of vehicle; ft/sec.

$$\text{BTU/hr. generated} = \frac{(E)(\text{stopping frequency/hr.})}{778} \qquad [28]$$

Then solving for the number of square feet of exposed disc area to dissipate the heat generated:

$$\text{Sq. Ft. Disc Area} = \frac{BTU/hr}{660} \qquad [14]$$

The constant of 660 is based on a maximum disc temperature of 300°F.

If there is a restriction in the disc diameter(s) and there is sufficient time between stops or multiple of stops for heat dissipation then we can size the disc to act as a heat sink.

$$Wd = \frac{BTU/hr.}{(220)(Sp)} \qquad [9]$$

Where:

- **Wd** = Weight of disc; lbs.
- **Sp** = Specific heat of disc may be taken as .12 for steel; BTU/lbs-°F

Refer to Table 1 (page 90) for selection. If your requirement falls outside of the standard(s) you may calculate the required thickness based on the maximum allowable diameter:

$$\text{Disc Thickness} = \frac{Wd}{(A)(.28)} \qquad [10]$$

Where:

Thickness is in inches

- **A** = Area of maximum allowable diameter; in^2

If it is found the disc thickness is unrealistic from an economic or space limitation standpoint, multiple discs will have to be provided or force ventilation must be considered.

Caliper Disc Brakes

ORDER ONLINE

APPLICATION DATA WORKSHEET

Use this form to request engineering assistance. The data you furnish will enable us to understand your application and recommend* the proper braking equipment. When available, please attach prints or dimensional drawings. Scan and email to help@tolomatic.com

NAME: _____

TITLE: _____

FIRM: _____

ADDRESS: _____

CITY: _____

STATE: _____ ZIP: _____

PHONE: (_____) _____

FAX: (_____) _____

A. VEHICLE SPECIFICATIONS

PLEASE CONTACT FACTORY

B. TENSIONING DATA

_____

_____

_____

_____

_____

_____

_____

_____

_____

_____

_____

_____

_____

_____

C. STATIONARY EQUIPMENT SPECIFICATIONS

CYCLIC STOPS? ☐ Yes ☐ No

W = Weight of rotating member, lbs.

R = Radius of rotating member, ft.

WK^2 OF ROTATING PARTS_____@RPM _____

DECELERATION NEEDED:

☐ Time_____ seconds from _____RPM

☐ _____ Radians per sec.^{2}

RELEASE PRESSURE FOR SPRING-APPLIED BRAKES ..... _____ psi

TYPE OF EQUIPMENT BRAKES WILL BE USED ON:

_____

_____

_____

_____

_____

MODEL: _____ PROJECT #: _____

D. GENERAL APPLICATION DATA

FREQUENCY OF STOPS:..... _____

COMPLETE OPERATING CYCLE:..... _____

MAXIMUM ALLOWABLE DISC DIAMETER:..... _____in.

MAXIMUM ALLOWABLE DISC THICKNESS:..... _____in.

TYPE OF ACTUATION: ☐ Mechanical ☐ Spring Applied ☐ Pneumatic ☐ Hydraulic

MAXIMUM HYDRAULIC OR AIR PRESSURE:..... _____ psi

BACK PRESSURE:..... _____ psi

DRIVE SHAFT APPLICATIONS ONLY:

Gear ratio is_____in favor of_____, or against_____the brake

AVAILABLE DISPLACEMENT:..... _____ $in.^3$

TYPE OF FLUID: _____MAXIMUM TORQUE: _____in.-lbs.

AMBIENT TEMPERATURES TO BE ENCOUNTERED:..... _____°F

LINING LIFE DESIRED:..... _____

LEVER FORCE AVAILABLE..... _____lbs.

E. ADDITIONAL COMMENTS

_____

_____

_____

_____

_____

_____

_____

_____

_____

* Recommendation is based on information supplied by the customer. Final acceptance and approval is the responsibility of the customer after field testing or simulation of field testing on the machine it is designed for.

Tolomatic™
EXCELLENCE *IN MOTION*

3800 County Road 116 • Hamel, MN 55340
Telephone: (763) 478-8000

Engineering Resources

CONVERSION TABLES

(TO CONVERT FROM A TO B, MULTIPLY BY ENTRY IN TABLE)

Length

A \ B	in	ft	yd	mm	cm	m
in	1	0.0833	0.028	25.4	2.54	0.0254
ft	12	1	0.333	304.8	30.48	0.3048
yd	36	3	1	914.4	91.44	0.914
mm	0.03937	0.00328	0.00109	1	0.1	0.001
cm	0.3937	0.03281	0.0109	10	1	0.01
m	39.37	3.281	1.09	1,000	100	1

Mass

A \ B	gm	kg	slug	lb(m)	oz(m)
gm	1	0.001	6.852×10^{-5}	2.205×10^{-3}	0.03527
kg	1,000	1	6.852×10^{-2}	2.205	35.274
slug	14,590	14.59	1	32.2	514.72
lb(m)	453.6	0.45359	0.0311	1	16
oz(m)	28.35	0.02835	1.94×10^{-3}	0.0625	1

Pressure

A \ B	atm	bar	millibar	lbs/sqr ft (PSF)	lbs/sqr in (PSI)	N/sqr m (NSM)	N/sqr mm (NSMM)
atm	1	1.01325	1,013.25	2116.22	14.6454	101,325	0.101325
bar	0.986923	1	1,000	2088.54	14.5037	100000	0.1
millibar	0.000987	0.001	1	2.08854	0.014504	100	0.0001
PSF	0.000473	0.000479	0.478803	1	0.006944	47.880	0.000048
PSI	0.068046	0.068948	68.94757	144	1	6,894.757	0.006895
NSM	0.00001	0.00001	0.01	0.020885	0.000145	1	0.000001
NSMM	98,692	10	10,000	20,885.43	145.0377	1,000,000	1

Temperature

°F = (1.8 x°C) + 32
°C = .555 (°F - 32)

Gravity

(Acceleration Constant)
g = 386 in/s^2 = 32.2 ft/s^2 = 9.8 m/s^2

Force

A \ B	lb(f)	N	dyne	oz(f)	kg(f)	gm(f)
lb(f)	1	4.4482	4.448×10^{5}	16	0.45359	453.6
N	0.22481	1	100,000	3.5967	0.10197	101.97
dyne	2.248×10^{-6}	0.00001	1	3.59×10^{-5}	1.02×10^{-6}	0.00102
oz(f)	0.0625	0.27801	2.78 x 104	1	.02835	28.35
kg(f)	2.205	9.80665	980,665	35.274	1	1,000
gm(f)	2.205×10^{-3}	0.0098	980.665	0.03527	0.001	1

NOTE: lb(f) = 1 slug x 1 ft/s^2 N = 1 kg x 1 m/s^2 dyne = 1gm x 1 cm/s^2

Power

A \ B	Watts	KW	HP (English)	HP(Metric)	ft-lb/s	in-lb/s
Watts	1	1×10^{-3}	1.34×10^{-3}	1.36×10^{-3}	0.74	8.88
kw	1,000	1	1.34	1.36	738	8,880
hp(English)	746	0.746	1	1.01	550	6,600
hp(Metric)	736	0.736	0.986	1	543	6,516
ft-lb/s	1.36	1.36×10^{-3}	1.82×10^{-3}	1.84×10^{-3}	1	12
in-lb/s	0.113	1.13×10^{-4}	1.52×10^{-4}	1.53×10^{-4}	8.3×10^{-2}	1

Abbreviated Terms

atm = atmosphere (STD)
C = Celsius
cm = centimeter
F = Fahrenheit
ft = foot
g = gravity
gm = gram
gm(f) = gram force
hp = horse power
in = inch
kg = kilogram
kg(f) = kilogram force
kw = Kilowatt
lb(f) = pound force
lb(m) = pound mass
min = minute
mm = millimeter
m = meter
N = Newton
oz(f) = ounce force
oz(m) = ounce mass
rad = radians
rpm = revs per minute
rps = revs per second
s = seconds
sqr = square

Engineering Resources

CONVERSION TABLES

(TO CONVERT FROM A TO B, MULTIPLY BY ENTRY IN TABLE)

Torque

A \ B	dyne-cm	gm-cm	oz-in	kg-cm	lb-in	N-m	lb-ft	kg-m
dyne-cm	1	1.019×10^{-2}	1.416×10^{-5}	1.0197×10^{-6}	8.850×10^{-7}	10^{-7}	7.375×10^{-6}	1.019×10^{-6}
gm-cm	980.665	1	1.388×10^{-2}	10-3	8.679×10^{-4}	9.806×10^{-5}	7.233×10^{-5}	10^{-5}
oz-in	7.061×10^{4}	72.007	1	7.200×10^{-2}	6.25×10^{-2}	7.061×10^{-3}	5.208×10^{-3}	7.200×10^{-4}
kg-cm	9.806×10^{5}	1,000	13.877	1	0.8679	9.806×10^{-2}	7.233×10^{-2}	10^{-2}
lb-in	1.129×10^{6}	1.152×10^{3}	16	1.152	1	0.112	8.333×10^{-2}	1.152×10^{-2}
N-m	10^{7}	1.019×10^{4}	141.612	10.197	8.850	1	0.737	0.102
lb-ft	1.355×10^{7}	1.382×10^{4}	192	13.825	12	1.355	1	0.138
kg-m	9.806×10^{7}	10^{5}	1.388×10^{3}	100	86.796	9.806	7.233	1

Inertia (Rotary)

NOTE: Mass inertia = $\frac{\text{wt. inertia}}{g}$

A \ B	gm-cm²	oz-in²	gm-cm-s²	kg-cm²	lb-in²	oz-in-s²	lb-ft²	kg-cm-s²	lb-in-s²	lb-ft-s² or slug-ft-s²
gm-cm²	1	5.46×10^{-2}	1.01×10^{-3}	10^{-3}	3.417×10^{-4}	1.41×10^{-5}	2.37×10^{-6}	1.01×10^{-4}	8.85×10^{-7}	7.37×10^{-4}
oz-in²	182.9	1	0.186	0.182	0.0625	2.59×10^{-2}	4.34×10^{-4}	1.86×10^{-4}	1.61×10^{-4}	1.34×10^{-5}
gm-cm-s²	980.6	5.36	1	0.9806	0.335	1.38×10^{-2}	2.32×10^{-3}	10^{-3}	8.67×10^{-4}	7.23×10^{-5}
kg-cm²	1,000	5.46	1.019	1	0.3417	1.41×10^{-2}	2.37×10^{-3}	1.019×10^{-3}	8.85×10^{-4}	7.37×10^{-5}
lb-in²	2.92×10^{3}	16	2.984	2.925	1	4.14×10^{-2}	6.94×10^{-3}	2.96×10^{-3}	2.59×10^{-3}	2.15×10^{-4}
oz-in-s²	7.06×10^{4}	386.08	72.0	70.615	24.13	1	0.1675	7.20×10^{-2}	6.25×10^{-2}	5.20×10^{-3}
lb-ft²	4.21×10^{5}	2,304	429.71	421.40	144	5.967	1	0.4297	0.3729	3.10×10^{-2}
kg-cm-s²	9.8×10^{5}	5.36×10^{3}	1,000	980.66	335.1	13.887	2.327	1	0.8679	7.23×10^{-2}
lb-in-s²	1.129×10^{4}	6.177×10^{3}	1.152×10^{3}	1.129×10^{3}	386.08	16	2.681	1.152	1	8.33×10^{-2}
lb-ft-s²	1.355×10^{7}	7.41×10^{4}	1.38×10^{4}	1.35×10^{4}	4.63×10^{3}	192	32.17	13.825	12	1

Angular Velocity

A \ B	deg/s	rad/s	rpm	rps
deg/s	1	1.75×10^{-2}	0.167	2.78×10^{-3}
rad/s	57.3	1	9.55	0.159
rpm	6	0.105	1	1.67×10^{-2}
rps	360	6.28	60	1

Linear Velocity

A \ B	in/min	ft/min	in/sec	ft/sec	mm/sec	m/sec
in/min	1	0.0833	0.0167	1.39×10^{-3}	0.42	4.2×10^{-4}
ft/min	12	1	.2	0.0167	5.08	5.08×10^{-3}
in/sec	60	5	1	0.083	25.4	0.0254
ft/sec	720	60	12	1	304.8	0.3048
cm/sec	23.62	1.97	0.3937	0.0328	10	0.01
m	2,362.2	196.9	39.37	3.281	1,000	1

TERMS / CONDITIONS OF SALE

1. ***ORDER ACCEPTANCE.*** All orders or services are subject to acceptance in Minnesota by the written approval of an authorized official of Tolomatic, Inc.. Any such order shall be subject to these Terms and Conditions of Sale, and acceptance shall be conditioned on Purchaser's assent to such conditions. Purchaser's assent shall be deemed given unless Purchaser shall expressly notify Tolomatic, Inc. in writing to the contrary within five (5) days after receipt of acknowledgment to confirmation of an order.

2. ***CANCELLATION AND CHANGES.*** No order accepted by Tolomatic, Inc. may be modified in any manner by Purchaser unless agreed to in writing, by an authorized official of Tolomatic, Inc.. Order cancellations, including reductions to order quantities, and changes shall be governed by the following:

   a. Any standard product order scheduled for shipment within five (5) working days of purchaser's request to cancel or modify will be shipped as previously acknowledged and purchaser agrees to accept shipment and payment responsibility, in full, at the price agreed upon.

   b. "Customer Special" orders scheduled for shipment within twenty (20) working days of purchaser's request to cancel or modify will be shipped as previously acknowledged and purchaser agrees to accept shipment and payment responsibility, in full, at the price agreed upon.

   c. All work in connection with "Customer Special" orders, not covered under Paragraph b, will be stopped immediately upon notification, and purchaser agrees to reimburse Tolomatic, Inc. for all work-in-process and any materials or supplies used, or for which commitments have been made by Tolomatic, Inc. in connection therewith.

3. ***QUOTATIONS AND PRICES.*** Written quotations automatically expire 30 calendar days from the date issued unless terminated sooner by written notice. (Verbal quotations expire, unless accepted in writing, the same day.)

   All published prices and discounts are subject to change without notice. In the event of a net price change, the price of product(s) on order will be the price in effect on the date of order acknowledgment. Any addition to an outstanding order will be accepted at prices in effect when the addition is made.

4. ***MINIMUM BILLING.*** Orders amounting to less than $35.00 net will be billed at $35.00

5. ***TAXES.*** Any Manufacturer's Tax, Retailers Occupation Tax, Use Tax, Sales Tax, Excise Tax, Duty, Customer, Inspection or Testing Fee, or any other tax, fee or charge of any nature whatsoever, imposed by any government authority, on or measured by any transactions between Tolomatic, Inc. and Purchaser shall be paid by the Purchaser in addition to the prices quoted or involved. In the event Tolomatic, Inc. shall be required to pay any such tax, fee or charge, Purchaser shall reimburse therefore.

6. ***TERMS OF PAYMENT.*** Net invoice amount is due within 30 days from date of invoice subject to credit approval. A 2% per month service charge shall apply to all invoices not paid within 30 days. All clerical errors are subject to correction. Any invoice in not paid within 60 days will subject that account to an immediate shipping hold.

7. ***F.0.B. POINT.*** All sales are F.0.B. Tolomatic, Inc.'s facility in Hamel, Minnesota, unless quoted otherwise.

8. ***DELIVERY.*** Delivery of product(s) by Tolomatic, Inc. to a carrier shall constitute delivery to Purchaser, and regardless of freight payment, title and all risk or loss or damage in transit shall pass to Purchaser at that time.

   Should shipment be held beyond scheduled date, upon request of Purchaser, product will be billed and Purchaser agrees to accept any charges for warehousing, trucking and other expenses as may be incident to such delay.

   Great care is taken by Tolomatic, Inc. in crating its product. Tolomatic, Inc. cannot be held responsible for breakage after having received "In Good Order" receipts from the transporting carrier. All claims for loss and damage must be made by Purchaser to the carrier within 14 days from receipt of goods. Tolomatic, Inc. will assist insofar as practical in securing satisfactory adjustment of such claims wherever possible.

   Claims for shortages or other errors must be made, in writing, within ten (10) days to Tolomatic, Inc. and any additional expense of the method or route of shipment specified by Purchaser shall be borne by the Purchaser.

9. ***SHIPPING SCHEDULES.*** All quoted shipping schedules are approximate and will depend upon prompt receipt from Purchaser of confirming copy of Purchase Order. Dimensional drawings and specifications submitted by Tolomatic, Inc. to Purchaser for approval must be returned to Tolomatic, Inc. within 10 working days, with approval granted, and any exceptions noted, in order to avoid delay in manufacturing schedules.

   Orders which include penalty clauses for failure to meet shipping schedules will not be acceptable, except in those cases specifically approved in writing by the General Manager of Tolomatic, Inc..

   Tolomatic, Inc. shall not be liable for damage as a result of any delay due to any cause beyond Tolomatic, Inc.'s reasonable control, including, without limitation, an Act of Nature; act of Purchaser; embargo, or other government act, regulation or request; fire; accident; strike; slow down; war; riot; flood; delay in transportation; and inability to obtain necessary labor, materials or manufacturing facilities. In the event of any such delay, the date of delivery shall be extended for a period equal to the time loss by reason of the delay. The acceptance of the product when delivered shall constitute a waiver of all claims for damages caused by any such delays.

10. ***RETURN OF PRODUCT.*** No product may be returned without first obtaining a Return Goods Authorization form and confirming memorandum from Tolomatic, Inc.. Product, if accepted for credit, shall be subject to a minimum service charge of 35% of the invoice price and all transportation charges shall be prepaid by the Purchaser; however, assembled products classified as "special," such as Cable Cylinders and other products which have been modified or built as "Customer Specials," are not returnable to Tolomatic, Inc..

11. ***WARRANTY.*** Tolomatic, Inc., WARRANTS PRODUCT MANUFACTURED BY IT TO BE FREE FROM DEFECTS IN MATERIAL AND WORKMANSHIP FOR A PERIOD OF ONE YEAR FROM DATE OF SHIPMENT BY Tolomatic, Inc.. IF WITHIN SUCH PERIOD ANY SUCH PRODUCT SHALL BE PROVED TO Tolomatic, Inc.'s SATISFACTION TO BE SO DEFECTIVE, SUCH PRODUCT SHALL EITHER BE REPAIRED OR REPLACED AT Tolomatic, Inc.'s OPTION.

   THIS WARRANTY SHALL NOT APPLY:

   a. TO PRODUCT NOT MANUFACTURED BY Tolomatic, Inc. WITH RESPECT TO PRODUCT NOT MANUFACTURED BY Tolomatic, Inc.. THE WARRANTY OBLIGATIONS OF Tolomatic, Inc. SHALL IN ALL RESPECTS CONFORM AND BE LIMITED TO THE WARRANTY ACTUALLY EXTENDED TO Tolomatic, Inc. BY ITS SUPPLIER.

   b. TO PRODUCT WHICH SHALL HAVE BEEN REPAIRED OR ALTERED BY PARTIES OTHER THAN Tolomatic, Inc. SO AS, IN Tolomatic, Inc.'s JUDGMENT, TO AFFECT THE SAME ADVERSELY, OR

   c. TO PRODUCT WHICH SHALL HAVE BEEN SUBJECT TO NEGLIGENCE, ACCIDENT, OR DAMAGE BY CIRCUMSTANCES BEYOND THE CONTROL OF Tolomatic, Inc. OR TO IMPROPER OPERATION MAINTENANCE OR STORAGE, OR TO OTHER THAN NORMAL USE AND SERVICE.

   THE FOREGOING WARRANTIES ARE EXCLUSIVE AND IN LIEU OF ALL OTHER EXPRESS AND IMPLIED WARRANTIES WHATSOEVER, INCLUDING BUT NOT LIMITED TO IMPLIED WARRANTIES OF MERCHANTABILITY AND FITNESS FOR A PARTICULAR PURPOSE, Tolomatic, Inc. SHALL NOT BE SUBJECT TO ANY OTHER OBLIGATIONS OR LIABILITIES WHATSOEVER WITH RESPECT TO PRODUCT MANUFACTURED OR SUPPLIED BY Tolomatic, Inc. OR SERVICE RENDERED BY IT.

12. ***CONSEQUENTIAL DAMAGE.*** Tolomatic, Inc., shall not, under any circumstances be liable for consequential damages.

13. ***SERVICE CHARGES.*** Should the Purchaser request the service of any erector, demonstrator or service man (except as specifically provided for and included in the price of the product) such service will be rendered at the rate outlined in the schedule of field service charges in effect at the date of request.

Tolomatic™

Linear Motion Solutions

ELECTRIC LINEAR ACTUATORS

Rod -Screw-Drive
Rodless Belt-Drive



SERVO LINEAR ACTUATORS

Rod-Style Integrated Motor
ServoWeld



PNEUMATIC LINEAR ACTUATORS

Rodless Band Cylinders
Cable Cylinders



POWER TRANSMISSION

Right Angle Gearboxes
Industrial Caliper Disc Brakes

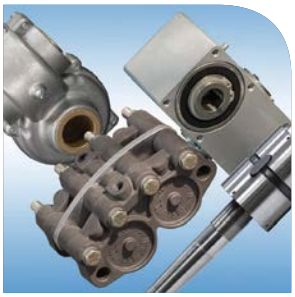

USA – Headquarters

Tolomatic, Inc.
Hamel MN 55340 USA

763-478-8000
1-800-328-2174
sales@tolomatic.com

tolomatic.com

MÉXICO

Service Center
Querétaro, Mexico
El Marqués, México

+1 (763) 478-8000
help@tolomatic.com

EUROPE

Tolomatic Europe GmbH
Rüsselsheim, Germany

+49 6142 17604-0
help@tolomatic.eu

tolomatic.com/de

CHINA

Tolomatic Automation Products (Suzhou) Co. Ltd.
Suzhou, Jiangsu, China

+86 512 6750 8506
TolomaticChina@tolomatic.com

tolomatic.cn

Learn More About Tolomatic

©2026. All brand and product names are trademarks of their respective owners. Information in this document is believed accurate at time of printing. However, Tolomatic assumes no responsibility for its use or for any errors that may appear in this document. Tolomatic reserves the right to change the design or operation of the equipment described herein and any associated motion products without notice. Information in this document is subject to change without notice.

Visit www.tolomatic.com for the most up-to-date technical information.