Tolomatic™
EXCELLENCE *IN MOTION*

MXE SCREW DRIVE ACTUATORS

ENDURANCE TECHNOLOGY℠
A Tolomatic Design Principle

[S] SOLID BEARING
[P] PROFILED RAIL



LINEAR SOLUTIONS MADE EASY

THE MXE ELECTRIC ACTUATOR – DESIGNED TO OUTLAST EVERY RODLESS ACTUATOR ON THE MARKET

The MXE electric actuator is exactly what you expect from the industry's number one rodless supplier. Designed with our exclusive **ENDURANCE TECHNOLOGY**SM features, the MX delivers superior performance to meet the most demanding applications. Nobody knows rodless like Tolomatic, and the MX proves it.

- **DURABLE BEARINGS.** Two bearing choices to match your application needs. Solid bearing design optimizes stress distribution for optimal performance. Profiled rail design uses recirculating ball technology to reduce friction and extend actuator life.
- **DURABLE BANDS.** Stainless steel bands are stronger and will not elongate like elastomer (non-metallic) bands, providing a reliable seal over the life of the actuator.



S-SOLID BEARING

- Large bearing surface contact area optimizes stress distribution on bearing for long service life
- Large carrier mounting pattern for more load stability and compatibility with existing BCS applications
- Engineered bearing material does not require additional lubrication
- Solid bearings are field replaceable

P-PROFILED RAIL

- Recirculating ball bearings with reduced friction for reliable service life
- High load and bending moment capacities
- Low profile to fit your application
- High precision bearings feature smooth, low breakaway motion

Our broad line of MX products includes electric actuators (belt-drive & screw-drive) and pneumatic rodless cylinders.

World class product performance, fifteen days built-to-order and legendary customer service . . . what you expect from the leader . . . Tolomatic!

SELECT THE PERFORMANCE YOU NEED

Choose from: • Two Bearing Models • Six Actuator Sizes • Built to Your Specified Stroke Length

MOMENT & LOAD CAPACITY COMPARISON

Graph for model comparison, data from MXE63 actuator

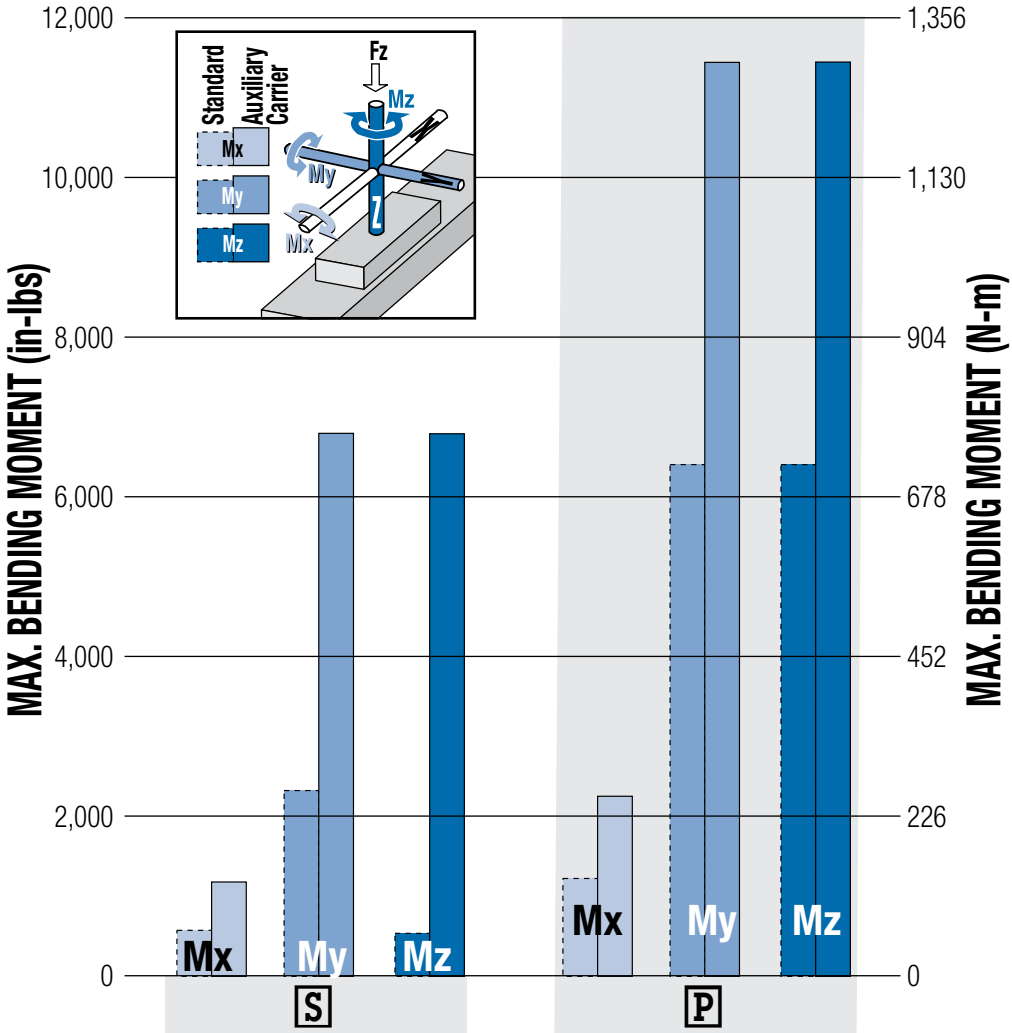

Tolomatic MX Electric Actuator Model		
Bearing Type	Solid Bearing	Profiled Rail
Moment Capacity	Moderate + Mx Capacity	High
Ideal Applications	• Side Loads • Moderate or Light Loads • Guided Loads	• High Moment Loads • High Speeds with Heavy Loads • High Precision
Product Features	**Page MXE_4**	**Page MXE_6**

CONTENTS

Introduction 2
Comparison 3
S Solid Bearing Features 4
P Profiled Rail Features 6
S Moment and Load Capacity 8
P Moment and Load Capacity 10
Specifications 13
Tube Clamp Requirements 16
Screw Critical Speed Capacities 17
S Solid Bearing Dimensions 21
P Profiled Rail Bearing Dimensions 23
S Reverse Parallel Motor Mounting Dimensions 25
P Reverse Parallel Motor Mounting Dimensions 27
Switches 29
Application Data Worksheet 31
Selection Guidelines 32
S Adjustment Procedures 33
Service Parts 34
Ordering 35

MXE-S SOLID BEARING SCREW ACTUATOR

ENDURANCE TECHNOLOGY℠

A Tolomatic Design Principle

Endurance Technology features are designed for maximum durability to provide extended service life.

The MXE-S rodless electric screw-drive actuator is designed for applications requiring moderate load carrying and guidance. The MXE-S actuator utilizes two field replaceable solid bearings that optimize stress distribution for optimal performance. Built-to-order in stroke lengths up to 3.4m (134").

LIGHTWEIGHT ALUMINUM DESIGN

Clear anodized extrusion design is optimized for rigidity and strength

STAINLESS STEEL BAND

Exterior dust band made of fatigue resistant, durable, flexible and corrosion resistant stainless steel

RETAINED DUST BAND

Retained dust band keeps contaminants from entering the actuator interior, protecting components for reduced maintenance and increased uptime

LARGE FLEXIBLE MOUNTING PATTERN

- Carrier gives more load stability
- Compatibility with existing BCS applications
- More fastening options

DUST WIPER

- Formed end cap and side dust wipers keep contaminants from entering the actuator's internal area

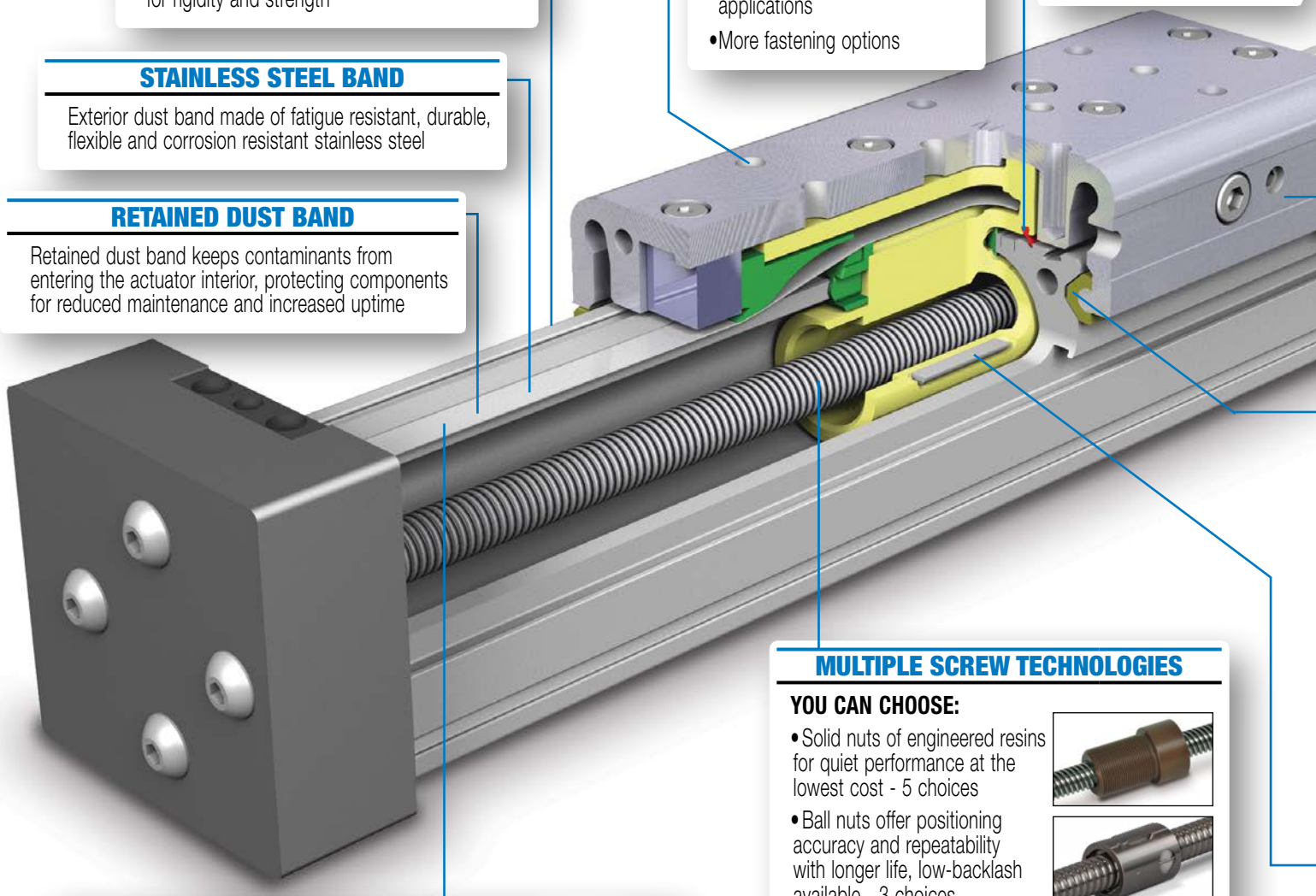

MULTIPLE SCREW TECHNOLOGIES

YOU CAN CHOOSE:

- Solid nuts of engineered resins for quiet performance at the lowest cost - 5 choices
- Ball nuts offer positioning accuracy and repeatability with longer life, low-backlash available - 3 choices

NON-WEAR BAND RETENTION

- Magnetically retained band is not subject to wear as are mechanically retained systems
- Immediate band engagement and release results in less drag on carrier for lower friction force during initial carrier movement

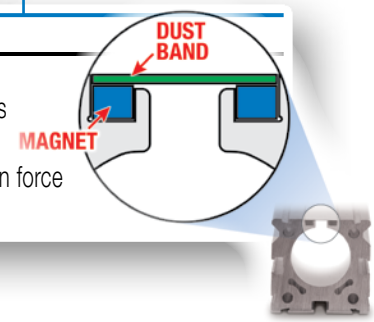

INCH OR METRIC MOUNTING

Your choice of inch *(US standard)* or metric mounting to the carrier

YOUR MOTOR HERE

YOU CAN CHOOSE:

- Motor or gearbox supplied and installed by Tolomatic
- Specify the device to be installed and actuator ships with proper mounting hardware - MXE is a "Your Motor Here" actuator for easy in-line motor installation. Check our website (www.tolomatic.com/ymh) for complete YMH information
- Specify and ship your device to Tolomatic for factory installation

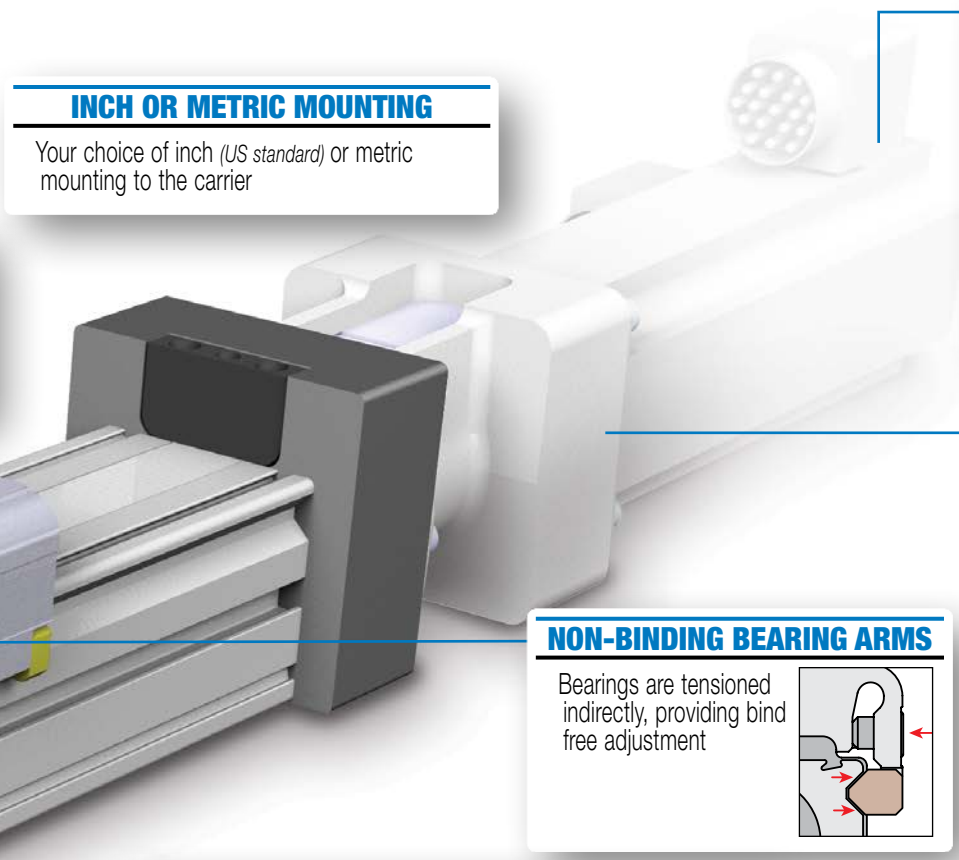

MOTOR ORIENTATION

YOU CAN CHOOSE:

- Inline option directly couples the driving shafts and is a one-piece housing construction for optimum alignment and support of the motor
- Reverse-parallel option minimizes the overall length and offers a 1:1 or 2:1 belt ratio

NON-BINDING BEARING ARMS

Bearings are tensioned indirectly, providing bind free adjustment

TRAPEZOIDAL BEARINGS

- Trapezoidal design maximizes bearing surface area for less pressure on bearing surfaces; less pressure results in less wear
- Engineered bearing material has low static and dynamic friction with low wear properties for long lasting, smooth operation
- Bearings are field replaceable for extended service life

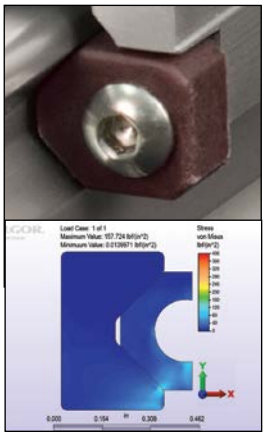

INTERNAL MAGNETS

Standard feature that allows sensor installation on the open side or bottom of the extrusion

NOTE: Boxed letters indicate ordering codes

OPTIONS



AUXILIARY CARRIER [D][C]

- 2X higher Fz (load) capacity
- High bending moment capacity



FLOATING MOUNT [F][L]

- Compensates for non-parallelism between MX actuator and externally guided load



TUBE CLAMPS [T][C]

- Used for intermediate support
- Flush with bottom of actuator to retain low profile
- Drop-in, adjustable mounting locations (MXE16 uses T-nuts with mounting plates)



MOUNTING PLATES [M][P]

- To provide clearance for motor and mount
- Use in conjunction with tube clamps



SWITCHES

- Wide variety of sensing choices: Reed, Solid State PNP or NPN, all available normally open or normally closed
- Flush mount, drop-in installation
- Bright LEDs, power & signal indication
- CE rated, RoHS compliant

MXE-P PROFILED RAIL SCREW ACTUATOR

ENDURANCE TECHNOLOGY℠

A Tolomatic Design Principle

Endurance Technology features are designed for maximum durability to provide extended service life.

The MXE-P rodless electric screw-drive actuator is designed for applications requiring moderate to heavy load carrying and guidance. The MXE-P actuator features a profiled rail system with recirculating ball linear guides for optimal performance. Built-to-order in stroke lengths up to 3.4m (134").

DUST WIPER

Formed end cap and side dust wipers keep contaminants from entering the actuator's internal area

INTERNAL MAGNETS

Standard feature that allows sensor installation on the open side or bottom of the extrusion

STAINLESS STEEL BAND

Exterior dust band made of fatigue resistant, durable, flexible and corrosion resistant stainless steel

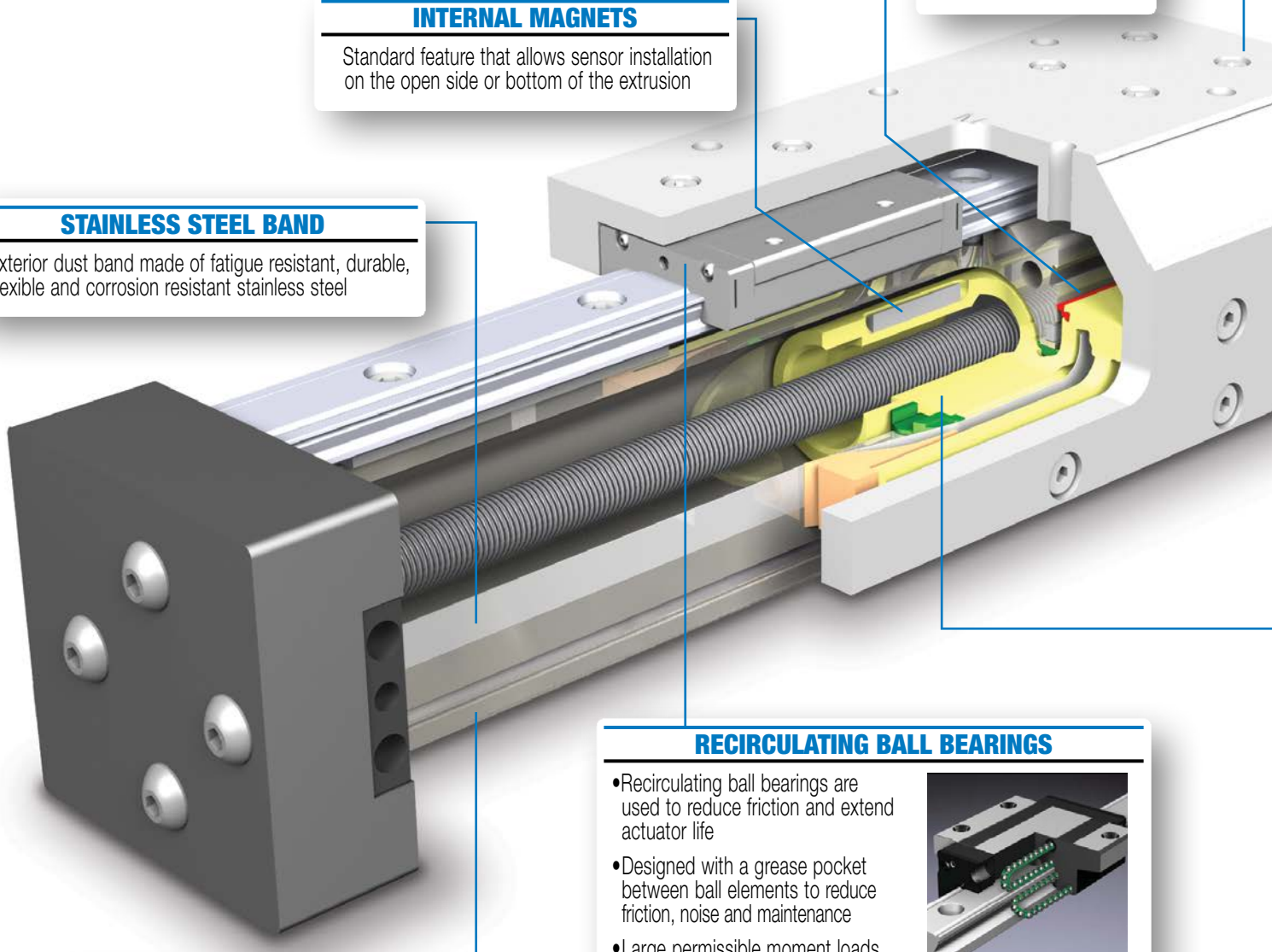

RECIRCULATING BALL BEARINGS

- Recirculating ball bearings are used to reduce friction and extend actuator life
- Designed with a grease pocket between ball elements to reduce friction, noise and maintenance
- Large permissible moment loads
- High speed operation, low heat generation
- High precision, smooth, low friction motion

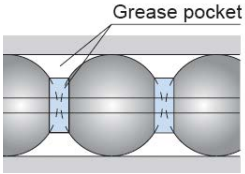

LIGHTWEIGHT ALUMINUM DESIGN

Clear anodized extrusion design is optimized for rigidity and strength

INCH OR METRIC MOUNTING

Your choice of inch *(US standard)* or metric mounting to the carrier

LOW CARRIER HEIGHT

- Reduces overall actuator envelope
- Large mounting pattern for excellent load stability

YOUR MOTOR HERE

YOU CAN CHOOSE:

- Motor or gearbox supplied and installed by Tolomatic
- Specify the device to be installed and actuator ships with proper mounting hardware - MXE is a "Your Motor Here" actuator for easy in-line motor installation. Check our website (www.tolomatic.com/ymh) for complete YMH information
- Specify and ship your device to Tolomatic for factory installation

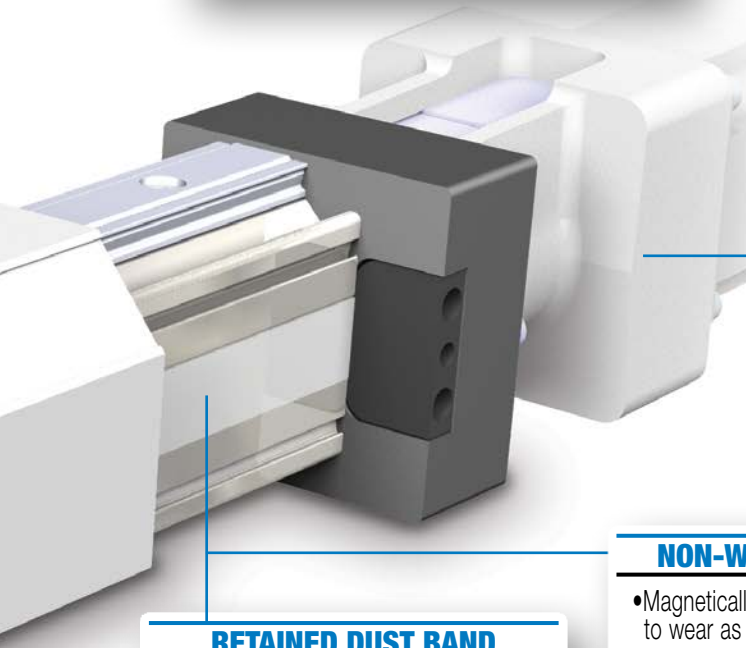

MOTOR ORIENTATION

YOU CAN CHOOSE:

- In-line option directly couples the driving shafts and is a one-piece housing construction for optimum alignment and support of the motor
- Reverse-parallel option minimizes the overall length and offers a 1:1 or 2:1 belt ratio

NON-WEAR BAND RETENTION

- Magnetically retained band is not subject to wear as are mechanically retained systems
- Immediate band engagement and release results in less drag on carrier for lower friction force during initial carrier movement

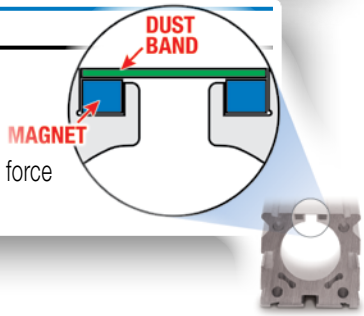

RETAINED DUST BAND

Retained dust band keeps contaminants from entering the actuator interior, protecting components for reduced maintenance and increased uptime

MULTIPLE SCREW TECHNOLOGIES

YOU CAN CHOOSE:



- Solid nuts of engineered resins offer quiet performance at the lowest cost - 5 choices



- Ball nuts offer positioning accuracy and repeatability with longer life, low-backlash available - 3 choices

NOTE: Boxed letters indicate ordering codes

OPTIONS

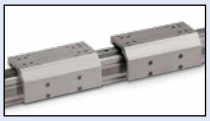

AUXILIARY CARRIER [D][C]

- 2X higher Fz (load) capacity
- High bending moment capacity



TUBE CLAMPS [T][C]

- Used for intermediate support
- Flush with bottom of actuator to retain low profile
- Drop-in, adjustable mounting locations (MXE16 uses T-nuts with Mounting Plates)



MIRRORED CARRIER [B][I][R]

- Bracket in Reverse *(Carrier) (Mirrored)*



MOUNTING PLATES [M][P]

- To provide clearance for motor and mount
- Use in conjunction with tube clamps



SWITCHES

- Wide variety of sensing choices: Reed, Solid State PNP or NPN, all available normally open or normally closed
- Flush mount, drop-in installation
- Bright LEDs, power & signal indication
- CE rated, RoHS compliant

STANDARD



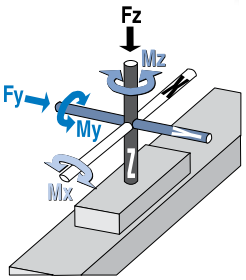

	Size	Bore	Maximum Bending Moments* Mx	My	Mz	Max. Load Fz
		in	in-lb	in-lb	in-lb	lb
US Measurements	16	0.6	*22*	*19*	*25*	*35*
	25	1.0	*60*	*110*	*34*	*70*
	32	1.3	*100*	*350*	*140*	*150*
	40	1.5	*275*	*600*	*220*	*225*
	50	2.0	*315*	*1,155*	*341*	*315*
	63	2.5	*585*	*2,340*	*520*	*520*

	Size	Bore	Maximum Bending Moments* Mx	My	Mz	Max. Load Fz
		mm	N-m	N-m	N-m	kg
Metric Measurements	16	16	*2.5*	*2.1*	*2.8*	*16*
	25	25	*6.8*	*12*	*3.8*	*32*
	32	32	*11*	*40*	*16*	*68*
	40	38	*31*	*68*	*25*	*102*
	50	50	*36*	*131*	*39*	*143*
	63	64	*66*	*264*	*59*	*236*

Ratings are the maximum values for shock-free, vibration-free operation in a typical industrial environment.
Contact Tolomatic for assistance in selecting the most appropriate actuator for your application.

The moment and load capacity of the actuator's bearing system is based on an L10 life of 5,000 linear km ($2x10^8$ in) of travel. Life of the actuator will vary for each application depending on the combined loads, motion parameters and operating conditions. The load factor (L_F) ratios for each application must not exceed a value of 1 (as calculated below). Exceeding a load factor of 1 will diminish the actuator's rated life.

$$L_F = \frac{Mx}{Mx_{max}} + \frac{My}{My_{max}} + \frac{Mz}{Mz_{max}} + \frac{Fy}{Fy_{max}} + \frac{Fz}{Fz_{max}} \leq 1$$

With combined loads, L_F must not exceed the value 1.

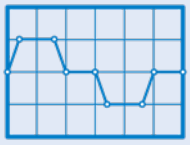

sizeit.tolomatic.com for fast, accurate actuator selection

sizeit.tolomatic.com for fast, accurate actuator selection or call Tolomatic (1-800-328-2174) with application information. We will provide any assistance needed to determine the proper MXE screw-driven actuator.



tolomatic.com/ask
Technical support before and after purchase

DW AUXILIARY CARRIER



	Size	Bore	"D" min	Maximum Bending Moments* MxA	MyA	MzA	Max. Load FzA
		in	in	in-lb	in-lb	in-lb	lb
US Measurements	16	0.6	5.0	44	175	175	70
	25	1.0	6.0	120	420	420	140
	32	1.3	7.0	200	1,050	1,050	300
	40	1.5	8.5	550	1,913	1,913	450
	50	2.0	8.6	630	2,709	2,709	630
	63	2.5	13	1,170	6,760	6,760	1,040

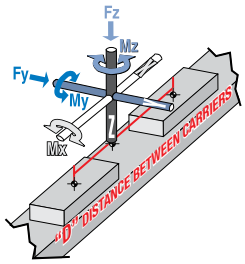

	Size	Bore	"D" min	Maximum Bending Moments* MxA	MyA	MzA	Max. Load FzA
		mm	mm	N-m	N-m	N-m	kg
Metric Measurements	16	16	127.0	5.0	20	20	32
	25	25	152.0	14	48	48	64
	32	32	178.0	23	119	119	136
	40	38	216.0	62	216	216	204
	50	50	218.0	71	306	306	286
	63	64	330.0	132	764	764	472

Ratings are the maximum values for shock-free, vibration-free operation in a typical industrial environment. Contact Tolomatic for assistance in selecting the most appropriate actuator for your application.

See additional information on previous page

**At minimum "D" distance between carriers see graph below for other distances*

Mya & Mza vs. DISTANCE

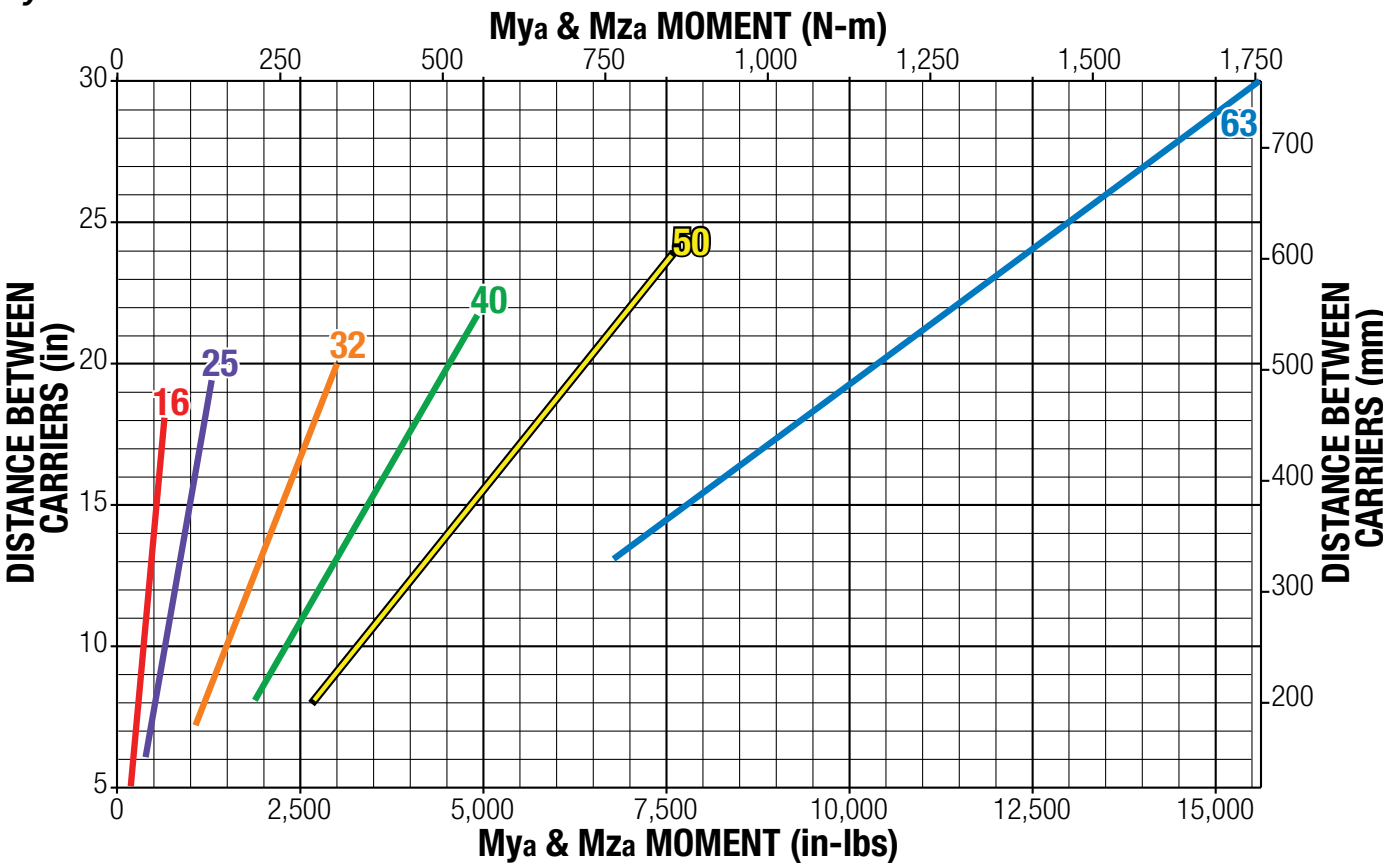

Ratings were calculated with the following conditions:

1.) Coupling between carriers is rigid.
2.) Load is equally distributed between carriers.
3.) Coupling device applies no misaligned loads to carriers.

P PROFILED RAIL MOMENT AND LOAD CAPACITY

STANDARD



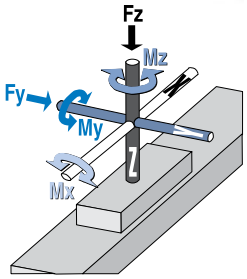

	Size	Bore	Maximum Bending Moments* Mx	My	Mz	Max. Load Fz	Fy
US Measurements		in	in-lb	in-lb	in-lb	lb	lb
	16	0.6	47	406	406	261	261
	25	1.0	151	602	452	539	539
	32	1.3	272	1,613	1,613	683	683
	40	1.5	725	2,296	2,296	883	883
	50	2.0	974	4,180	4,180	1,217	1,217
	63	2.5	1,223	6,407	6,407	1,500	1,500

	Size	Bore	Maximum Bending Moments* Mx	My	Mz	Max. Load Fz	Fy
Metric Measurements		mm	N-m	N-m	N-m	kg	kg
	16	16	5.3	46	46	118	118
	25	25	17	68	51	244	244
	32	32	31	182	182	310	310
	40	38	82	259	259	401	401
	50	50	110	472	472	552	552
	63	64	138	724	724	703	703

Ratings are the maximum values for shock-free, vibration-free operation in a typical industrial environment. Contact Tolomatic for assistance in selecting the most appropriate actuator for your application.

NOTE: Mating surface of component mounted to carrier must maintain a flatness of at least 0.0015" (0.040 mm)

The moment and load capacity of the actuator's bearing system is based on an L10 life of 5,000 linear km ($2x10^8$ in) of travel. Life of the actuator will vary for each application depending on the combined loads, motion parameters and operating conditions. The load factor (L_F) ratios for each application must not exceed a value of 1 (as calculated below). Exceeding a load factor of 1 will diminish the actuator's rated life.

$$L_F = \frac{Mx}{Mx_{max}} + \frac{My}{My_{max}} + \frac{Mz}{Mz_{max}} + \frac{Fy}{Fy_{max}} + \frac{Fz}{Fz_{max}} \leq 1$$

With combined loads, L_F must not exceed the value 1.

SPEED FACTOR

FOR APPLICATIONS WITH HIGH SPEED OR SIGNIFICANT SHOCK AND VIBRATION: Calculated values of loads and bending moments must be increased by speed factor from the graph at right to obtain full rated life of profiled rail bearing system.

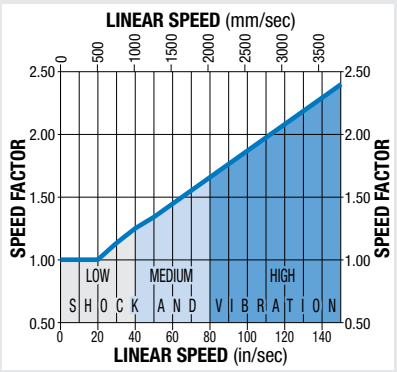

PROFILED RAIL LUBRICATION

Proper lubrication of profiled rail bearing system is essential for normal operation and achievement of full rated life of MX--P actuators. Lubrication should be performed at intervals of 102 km ($4x10^6$ in) of travel or once every year, whichever occurs first. **However, operating conditions such as high speed or significant shock and vibration may require more frequent lubrication.** Please consult Tolomatic for recommendations.

Recommended grease types:

1. Refined mineral oil-based multi-purpose grease with lithium thickening agent.
2. High-grade synthetic oil-based grease with urea thickening agent.

P PROFILED RAIL MOMENT AND LOAD CAPACITY

DW AUXILIARY CARRIER



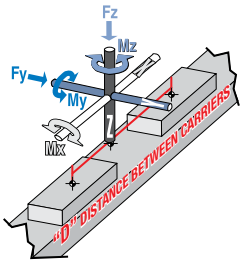

	Size	Bore	"D" min	Maximum Bending Moments*			Max. Load	
				MxA	MyA	MzA	FzA	FyA
		in	in	in-lb	in-lb	in-lb	lb	lb
US Measurements	16	0.6	5.0	*95*	*744*	*744*	*521*	*521*
	25	1.0	6.0	*303*	*1,932*	*1,932*	*1,077*	*1,077*
	32	1.3	7.0	*543*	*2,643*	*2,643*	*1,366*	*1,366*
	40	1.5	8.5	*1,449*	*4,322*	*4,322*	*1,767*	*1,767*
	50	2.0	8.6	*1,947*	*5,959*	*5,959*	*2,433*	*2,433*
	63	2.5	13	*2,446*	*11,409*	*11,409*	*3,100*	*3,100*

	Size	Bore	"D" min	Maximum Bending Moments*			Max. Load	
				MxA	MyA	MzA	FzA	FyA
		mm	mm	N-m	N-m	N-m	kg	kg
Metric Measurements	16	16	127	*11*	*84*	*84*	*236*	*236*
	25	25	152	*34*	*218*	*218*	*489*	*489*
	32	32	178	*61*	*299*	*299*	*620*	*620*
	40	38	216	*164*	*488*	*488*	*801*	*801*
	50	50	218	*220*	*673*	*673*	*1,104*	*1,104*
	63	64	330	*276*	*1,289*	*1,289*	*1,406*	*1,406*

**At minimum "D" distance between carriers see graph below for other distances*

Mya & Mza vs. DISTANCE

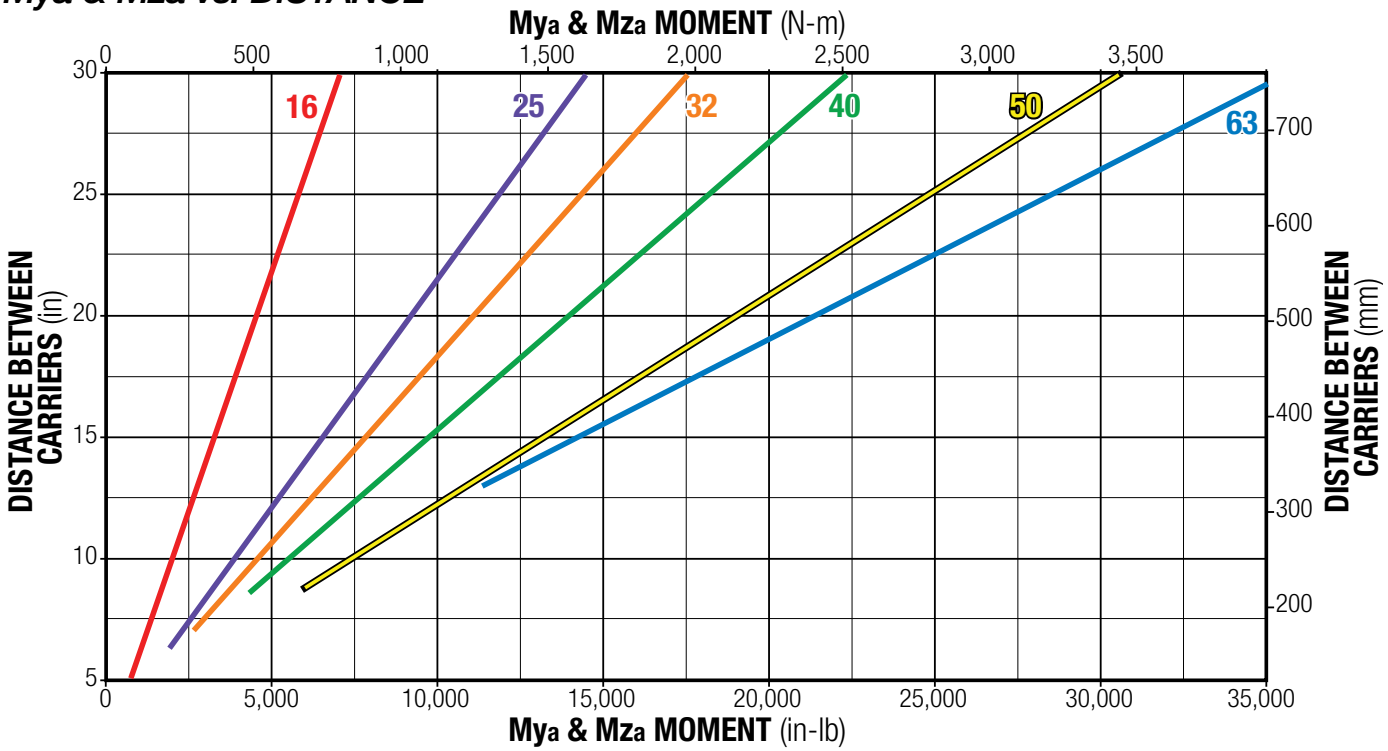

Ratings were calculated with the following conditions:

1.) Coupling between carriers is rigid.
2.) Load is equally distributed between carriers.
3.) Coupling device applies no misaligned loads to carriers.

LOAD DEFLECTION

DEFLECTION ABOUT X AXIS

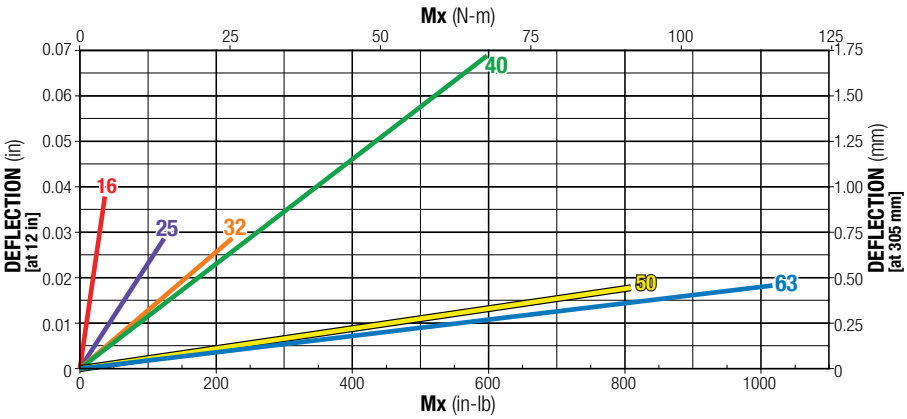

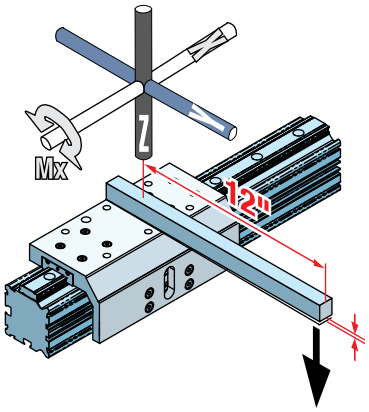

DEFLECTION ABOUT Y AXIS

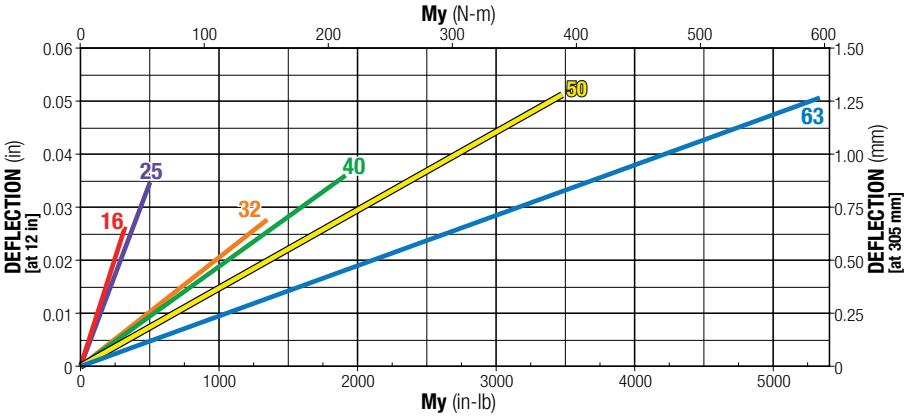

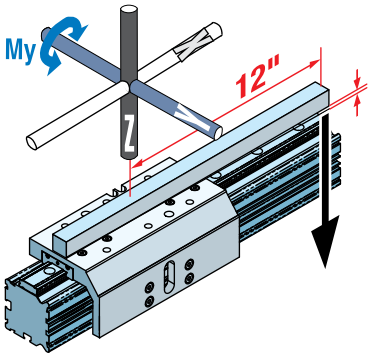

DEFLECTION ABOUT Z AXIS

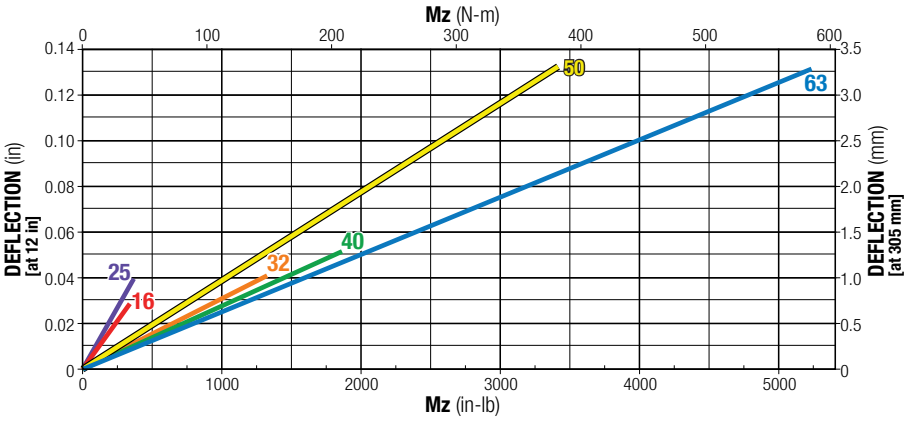

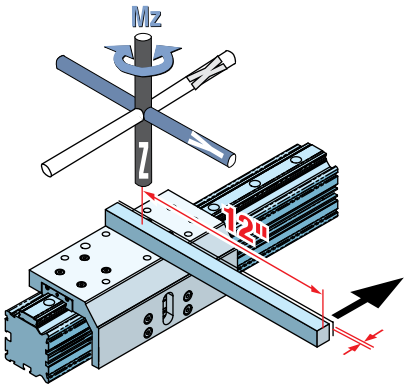

sizeit.tolomatic.com for fast, accurate actuator selection

tolomatic.com/ask Technical support before and after purchase

DEFLECTION TESTING WAS DONE UNDER THESE CRITERIA:

1.) Actuator was properly mounted with distance between mounting plates within recommendations (see Tube Clamp Requirements page MXE_16)

2.) Deflection was measured at 12" from center of carrier as shown

[S] & [P] ACTUATOR SPECIFICATIONS AND BREAKAWAY TORQUE

GENERAL ACTUATOR SPECIFICATIONS

SIZE	WEIGHT						STRAIGHTNESS / FLATNESS***	TEMP. RANGE
	CARRIER*		BASE ACTUATOR**		PER mm OF STROKE			
	[S]	[P]	[S]	[P]	[S]	[P]		
	kg	kg	kg	kg	kg/mm	kg/mm	mm	°C
16	0.21	0.26	0.56	0.65	0.0018	0.0021	.0170 x L†	4 to 54
25	0.41	0.46	0.96	1.11	0.0034	0.0045		
32	0.79	0.96	1.24	1.50	0.0052	0.0066		
40	1.43	1.69	2.42	3.12	0.0071	0.0104		
50	2.39	3.16	6.76	8.29	0.0114	0.0150		
63	5.88	6.77	15.90	17.84	0.0193	0.0243		

SIZE	WEIGHT						STRAIGHTNESS / FLATNESS***	TEMP. RANGE
	CARRIER*		BASE ACTUATOR**		PER in OF STROKE			
	[S]	[P]	[S]	[P]	[S]	[P]		
	lb	lb	lb	lb	lb/in	lb/in	in	°F
16	*0.47*	*0.58*	*1.24*	*1.43*	*0.10*	*0.12*	*.00067 x L†*	*40 to 130*
25	*0.91*	*1.02*	*2.11*	*2.44*	*0.19*	*0.25*		
32	*1.74*	*2.12*	*2.74*	*3.30*	*0.29*	*0.37*		
40	*3.15*	*3.72*	*5.34*	*6.88*	*0.40*	*0.58*		
50	*5.27*	*6.97*	*14.91*	*18.27*	*0.64*	*0.84*		
63	*12.96*	*14.92*	*35.05*	*39.34*	*1.08*	*1.36*		

[S] = Solid Bearing, [P] = Profiled Rail Bearing
*including nut bracket assembly
**Excluding nut bracket and carrier assembly
***Actuator mounted on a flat surface and fully restrained (See tube clamp graphs page MXE_16)
† L = Maximum distance between tube clamps

IP Rating - 44 *Approximately equivalent to the requirements of IP44 (protected against ingress of solid particles greater than .039 in (1 mm) and splashing water)*

FRICTION FORCE [S]-ACTUATORS

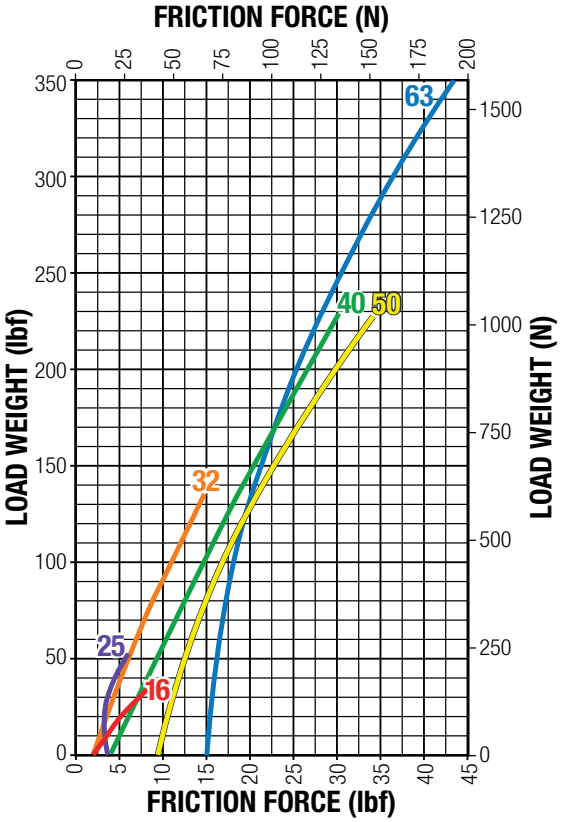

sizeit.tolomatic.com for fast, accurate actuator selection

BREAKAWAY TORQUE

ACTUATOR SERIES	SCREW DIAMETER	SCREW ORDERING DESCRIPTION	BREAKAWAY TORQUE	
			SINGLE CARRIER	AUXILIARY CARRIER
	mm		N-m	N-m
MXE16	6.35	SN02	0.071	0.099
	6.35	SN04	0.071	0.099
	6.35	SN16	0.071	0.099
MXE25	9.53	BN08	0.113	0.127
	9.53	BNL08	0.113	0.127
	10.00	BNM10	0.113	0.127
	12.70	SN01	0.212	0.325
	12.70	SN02	0.177	0.247
	12.70	SN05	0.127	0.155
MXE32	9.53	BN08	0.113	0.127
	9.53	BNL08	0.113	0.127
	10.00	BNM10	0.113	0.127
	12.70	SN01	0.212	0.325
	12.70	SN02	0.177	0.247
	12.70	SN05	0.127	0.155
MXE40	12.70	BN02	0.198	0.247
	12.70	BNL02	0.198	0.247
	15.88	BN05	0.247	0.318
	15.88	BNL05	0.247	0.318
	15.88	SN02	0.245	0.311
	19.05	SN01	0.353	0.508
MXE50	19.05	BN02	0.282	0.353
	19.05	BNL02	0.282	0.353
	19.05	BN05	0.247	0.318
	19.05	BNL05	0.247	0.318
MXE63	25.40	BN01	0.530	0.756
	25.40	BNL01	0.530	0.756
	25.40	BN02	0.530	0.756
	25.40	BNL02	0.530	0.756
	25.40	BN04	0.600	0.855
	25.40	BNL04	0.600	0.855

ACTUATOR SERIES	SCREW DIAMETER	SCREW ORDERING DESCRIPTION	BREAKAWAY TORQUE	
			SINGLE CARRIER	AUXILIARY CARRIER
	in		oz-in	oz-in
MXE16	0.250	SN02	10	14
	0.250	SN04	10	14
	0.250	SN16	10	14
MXE25	0.375	BN08	16	18
	0.375	BNL08	16	18
	0.394	BNM10	16	18
	0.500	SN01	30	46
	0.500	SN02	25	35
	0.500	SN05	18	22
MXE32	0.375	BN08	16	18
	0.375	BNL08	16	18
	0.500	BNM10	30	46
	0.394	SN01	16	18
	0.500	SN02	25	35
	0.500	SN05	18	22
MXE40	0.500	BN02	28	35
	0.500	BNL02	28	35
	0.625	BN05	35	45
	0.625	BNL05	35	45
	0.625	SN02	35	44
	0.750	SN01	50	72
MXE50	0.750	BN02	40	50
	0.750	BNL02	40	50
	0.750	BN05	35	45
	0.750	BNL05	35	45
MXE63	1.000	BN01	75	107
	1.000	BNL01	75	107
	1.000	BN02	75	107
	1.000	BNL02	75	107
	1.000	BN04	85	121
	1.000	BNL04	85	121

SCREW SPECIFICATIONS

ACTUATOR SERIES	SCREW DIAMETER	SCREW ORDERING DESCRIPTION	SCREW LEAD	LEAD ACCURACY	BACKLASH	MAX THRUST	MAX STROKE
	mm		mm	mm/ 300mm	mm	N	mm
MXE16	6.35	SN02	12.70	0.13	0.38	200	787.4
	6.35	SN04	6.35	0.13	0.38	200	787.4
	6.35	SN16	1.59	0.13	0.38	200	787.4
MXE25	9.53	BN08	3.18	0.10	0.38	578	1582.4
	9.53	BNL08	3.18	0.10	0.05	578	1582.4
	10.00	BNM10	10.00	0.10	0.06	1832	1582.4
	12.70	SN01	25.40	0.15	0.18	756	2496.8
	12.70	SN02	12.70	0.13	0.18	756	3411.2
	12.70	SN05	5.08	0.15	0.18	756	3411.2
MXE32	9.53	BN08	3.18	0.10	0.38	578	1572.3
	9.53	BNL08	3.18	0.10	0.05	578	1572.3
	10.00	BNM10	10.00	0.10	0.06	1832	1572.3
	12.70	SN01	25.40	0.15	0.18	756	2486.7
	12.70	SN02	12.70	0.13	0.18	756	3401.1
	12.70	SN05	5.08	0.15	0.18	756	3401.1
MXE40	12.70	BN02	12.70	0.08	0.38	3559	1521.5
	12.70	BNL02	12.70	0.08	0.05	3559	1521.5
	15.88	BN05	5.08	0.08	0.38	3559	1521.5
	15.88	BNL05	5.08	0.08	0.05	3559	1521.5
	15.88	SN02	12.70	0.13	0.18	890	3350.3
	19.05	SN01	25.40	0.13	0.18	1334	3350.3
MXE50	19.05	BN02	12.70	0.10	0.38	12010	3319.8
	19.05	BNL02	12.70	0.10	0.05	12010	3319.8
	19.05	BN05	5.08	0.08	0.38	4226	3319.8
	19.05	BNL05	5.08	0.08	0.05	4226	3319.8
MXE63	25.40	BN01	25.40	0.10	0.38	11121	3185.2
	25.40	BNL01	25.40	0.10	0.05	11121	3185.2
	25.40	BN02	12.70	0.10	0.38	19127	3185.2
	25.40	BNL02	12.70	0.10	0.05	19127	3185.2
	25.40	BN04	6.35	0.10	0.38	14679	3185.2
	25.40	BNL04	6.35	0.10	0.05	14679	3185.2

ACTUATOR SERIES	SCREW DIAMETER	SCREW ORDERING DESCRIPTION	SCREW PITCH	SCREW LEAD	LEAD ACCURACY	BACKLASH	MAX THRUST	MAX STROKE
	in		rev/in	in	in/ft	in	lb	in
MXE16	0.250	SN02	2.00	0.50	0.005	0.015	45	31.0
	0.250	SN04	4.00	0.25	0.005	0.015	45	31.0
	0.250	SN16	16.00	0.06	0.005	0.015	45	31.0
MXE25	0.375	BN08	8.00	0.13	0.004	0.015	130	62.3
	0.375	BNL08	8.00	0.13	0.004	0.002	130	62.3
	0.394	BNM10	2.54	0.39	0.004	0.003	412	62.3
	0.500	SN01	1.00	1.00	0.006	0.007	170	98.3
	0.500	SN02	2.00	0.50	0.005	0.007	170	134.3
	0.500	SN05	5.00	0.20	0.006	0.007	170	134.3
MXE32	0.375	BN08	8.00	0.13	0.004	0.015	130	61.9
	0.375	BNL08	8.00	0.13	0.004	0.002	130	61.9
	0.394	BNM10	2.54	0.39	0.004	0.003	412	61.9
	0.500	SN01	1.00	1.00	0.006	0.007	170	97.9
	0.500	SN02	2.00	0.50	0.005	0.007	170	133.9
	0.500	SN05	5.00	0.20	0.006	0.007	170	133.9
MXE40	0.500	BN02	2.00	0.50	0.003	0.015	800	59.9
	0.500	BNL02	2.00	0.50	0.003	0.002	800	59.9
	0.625	BN05	5.00	0.20	0.003	0.015	800	59.9
	0.625	BNL05	5.00	0.20	0.003	0.002	800	59.9
	0.625	SN02	2.00	0.50	0.005	0.007	200	131.9
	0.750	SN01	1.00	1.00	0.005	0.007	300	131.9
MXE50	0.750	BN02	2.00	0.50	0.004	0.015	2700	130.7
	0.750	BNL02	2.00	0.50	0.004	0.002	2700	130.7
	0.750	BN05	5.00	0.20	0.003	0.015	950	130.7
	0.750	BNL05	5.00	0.20	0.003	0.002	950	130.7
MXE63	1.000	BN01	1.00	1.00	0.004	0.015	2500	125.4
	1.000	BNL01	1.00	1.00	0.004	0.002	2500	125.4
	1.000	BN02	2.00	0.50	0.004	0.015	4300	125.4
	1.000	BNL02	2.00	0.50	0.004	0.002	4300	125.4
	1.000	BN04	4.00	0.25	0.004	0.015	3300	125.4
	1.000	BNL04	4.00	0.25	0.004	0.002	3300	125.4

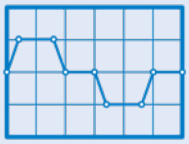

sizeit.tolomatic.com for fast, accurate actuator selection

sizeit.tolomatic.com for fast, accurate actuator selection or call Tolomatic (1-800-328-2174) with application information. We will provide any assistance needed to determine the proper MXE screw-driven actuator.



tolomatic.com/ask Technical support before and after purchase

REFLECTED INERTIA

ACTUATOR SERIES	SCREW DIAMETER	SCREW ORDERING DESCRIPTION	REFLECTED INERTIA				
			BASE ACTUATOR				
			[S] SOLID		[P] PROFILED RAIL		
			IN-LINE	REV PARALLEL	IN-LINE	REV PARALLEL	PER 25mm OF STROKE
	mm		kg-cm²	kg-cm²	kg-cm²	kg-cm²	kg-cm²
MXE16	6.35	SN02	0.0170	0.0170	0.0202	0.0202	0.0003
	6.35	SN04	0.0059	0.0059	0.0067	0.0067	0.0003
	6.35	SN16	0.0026	0.0026	0.0026	0.0026	0.0003
MXE25	9.53	BN08	0.0182	0.0182	0.0183	0.0183	0.0015
	9.53	BNL08	0.0182	0.0182	0.0183	0.0183	0.0015
	10.00	BNM10	0.0182	0.0182	0.0183	0.0183	0.0015
	12.70	SN01	0.1456	0.1456	0.1583	0.1583	0.0050
	12.70	SN02	0.0623	0.0623	0.0654	0.0654	0.0050
	12.70	SN05	0.0390	0.0390	0.0395	0.0395	0.0050
MXE32	9.53	BN08	0.0193	0.0193	0.0198	0.0198	0.0015
	9.53	BNL08	0.0193	0.0193	0.0198	0.0198	0.0015
	10.00	BNM10	0.0182	0.0182	0.0183	0.0183	0.0015
	12.70	SN01	0.2436	0.2465	0.2940	0.2969	0.0050
	12.70	SN02	0.0868	0.0897	0.0994	0.1023	0.0050
	12.70	SN05	0.0429	0.0458	0.0449	0.0478	0.0050
MXE40	12.70	BN02	0.1468	0.1470	0.1593	0.1594	0.0050
	12.70	BNL02	0.1480	0.1497	0.1593	0.1594	0.0050
	15.88	BN05	0.1480	0.1497	0.1500	0.1517	0.0123
	15.88	BNL05	0.1480	0.1497	0.1500	0.1517	0.0123
	15.88	SN02	0.2286	0.2304	0.2463	0.2480	0.0123
	19.05	SN01	0.5956	0.5973	0.6661	0.6679	0.0255
MXE50	19.05	BN02	0.4208	0.4246	0.4580	0.4618	0.0255
	19.05	BNL02	0.4208	0.4246	0.4580	0.4618	0.0255
	19.05	BN05	0.3231	0.3269	0.3289	0.3327	0.0255
	19.05	BNL05	0.3231	0.3269	0.3289	0.3327	0.0255
MXE63	25.40	BN01	2.5943	2.5966	2.7688	2.7711	0.0805
	25.40	BNL01	2.5943	2.5966	2.7688	2.7711	0.0805
	25.40	BN02	1.7459	1.7482	1.7889	1.7813	0.0805
	25.40	BNL02	1.7459	1.7482	1.7889	1.7813	0.0805
	25.40	BN04	1.5349	1.5372	1.5450	1.5473	0.0805
	25.40	BNL04	1.5349	1.5372	1.5450	1.5473	0.0805

ACTUATOR SERIES	SCREW DIAMETER	SCREW ORDERING DESCRIPTION	SCREW PITCH	REFLECTED INERTIA				
				BASE ACTUATOR				
				[S] SOLID		[P] PROFILED RAIL		
				IN-LINE	REV PARALLEL	IN-LINE	REV PARALLEL	PER IN OF STROKE
	in		rev/in	lb-in²	lb-in²	lb-in²	lb-in²	lb-in²
MXE16	0.250	SN02	2.00	0.0058	0.0058	0.0069	0.0069	0.0001
	0.250	SN04	4.00	0.0020	0.0020	0.0023	0.0023	0.0001
	0.250	SN16	16.00	0.0009	0.0009	0.0009	0.0009	0.0001
MXE25	0.375	BN08	8.00	0.0062	0.0062	0.0063	0.0063	0.0005
	0.375	BNL08	8.00	0.0062	0.0062	0.0063	0.0063	0.0005
	0.394	BNM10	2.54	0.0062	0.0062	0.0063	0.0063	0.0005
	0.500	SN01	1.00	0.0498	0.0498	0.0541	0.0541	0.0017
	0.500	SN02	2.00	0.0213	0.0213	0.0224	0.0224	0.0017
	0.500	SN05	5.00	0.0133	0.0133	0.0135	0.0135	0.0017
MXE32	0.375	BN08	8.00	0.0066	0.0066	0.0068	0.0068	0.0005
	0.375	BNL08	8.00	0.0066	0.0066	0.0068	0.0068	0.0005
	0.500	BNM10	2.54	0.0832	0.0842	0.1005	0.1015	0.0017
	0.394	SN01	1.00	0.0062	0.0062	0.0063	0.0063	0.0005
	0.500	SN02	2.00	0.0296	0.0306	0.0340	0.0350	0.0017
	0.500	SN05	5.00	0.0147	0.0157	0.0153	0.0163	0.0017
MXE40	0.500	BN02	2.00	0.0502	0.0502	0.0544	0.0545	0.0017
	0.500	BNL02	2.00	0.0502	0.0512	0.0544	0.0545	0.0017
	0.625	BN05	5.00	0.0506	0.0512	0.0512	0.0518	0.0042
	0.625	BNL05	5.00	0.0506	0.0512	0.0512	0.0518	0.0042
	0.625	SN02	2.00	0.0781	0.0787	0.0842	0.0848	0.0042
	0.750	SN01	1.00	0.2035	0.2041	0.2276	0.2282	0.0087
MXE50	0.750	BN02	2.00	0.1438	0.1451	0.1565	0.1578	0.0087
	0.750	BNL02	2.00	0.1438	0.1451	0.1565	0.1578	0.0087
	0.750	BN05	5.00	0.1104	0.1117	0.1124	0.1137	0.0087
	0.750	BNL05	5.00	0.1104	0.1117	0.1124	0.1137	0.0087
MXE63	1.000	BN01	1.00	0.8865	0.8873	0.9466	0.9474	0.0275
	1.000	BNL01	1.00	0.8865	0.8873	0.9466	0.9474	0.0275
	1.000	BN02	2.00	0.5966	0.5974	0.6116	0.6124	0.0275
	1.000	BNL02	2.00	0.5966	0.5974	0.6116	0.6124	0.0275
	1.000	BN04	4.00	0.5245	0.5253	0.5282	0.5290	0.0275
	1.000	BNL04	4.00	0.5245	0.5253	0.5282	0.5290	0.0275

sizeit.tolomatic.com for fast, accurate actuator selection

tolomatic.com/ask Technical support before and after purchase

S & P TUBE CLAMP REQUIREMENTS

sizeit.tolomatic.com for fast, accurate actuator selection

S SOLID BEARING

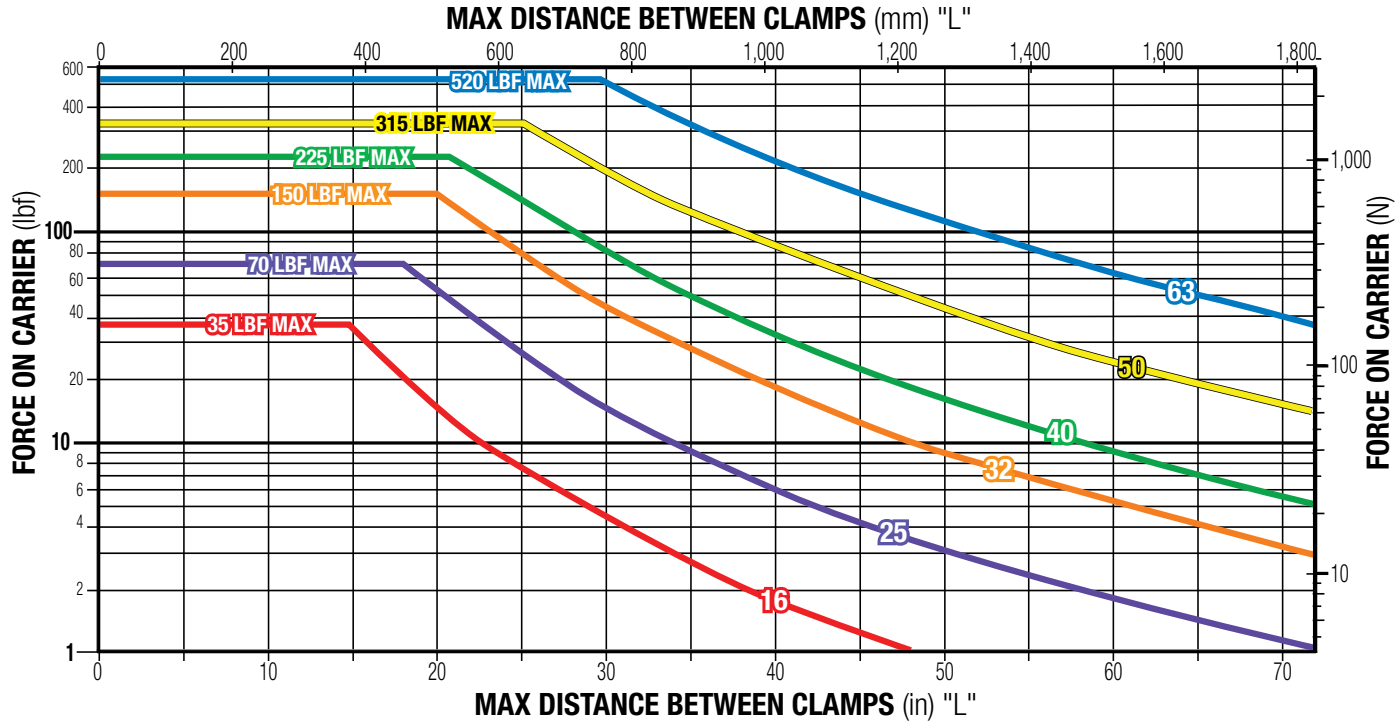

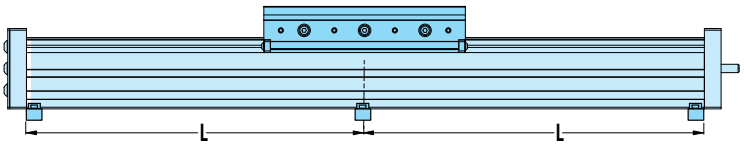

NOTE: MXE16 uses T-Nuts with mounting plates

P PROFILED RAIL BEARING

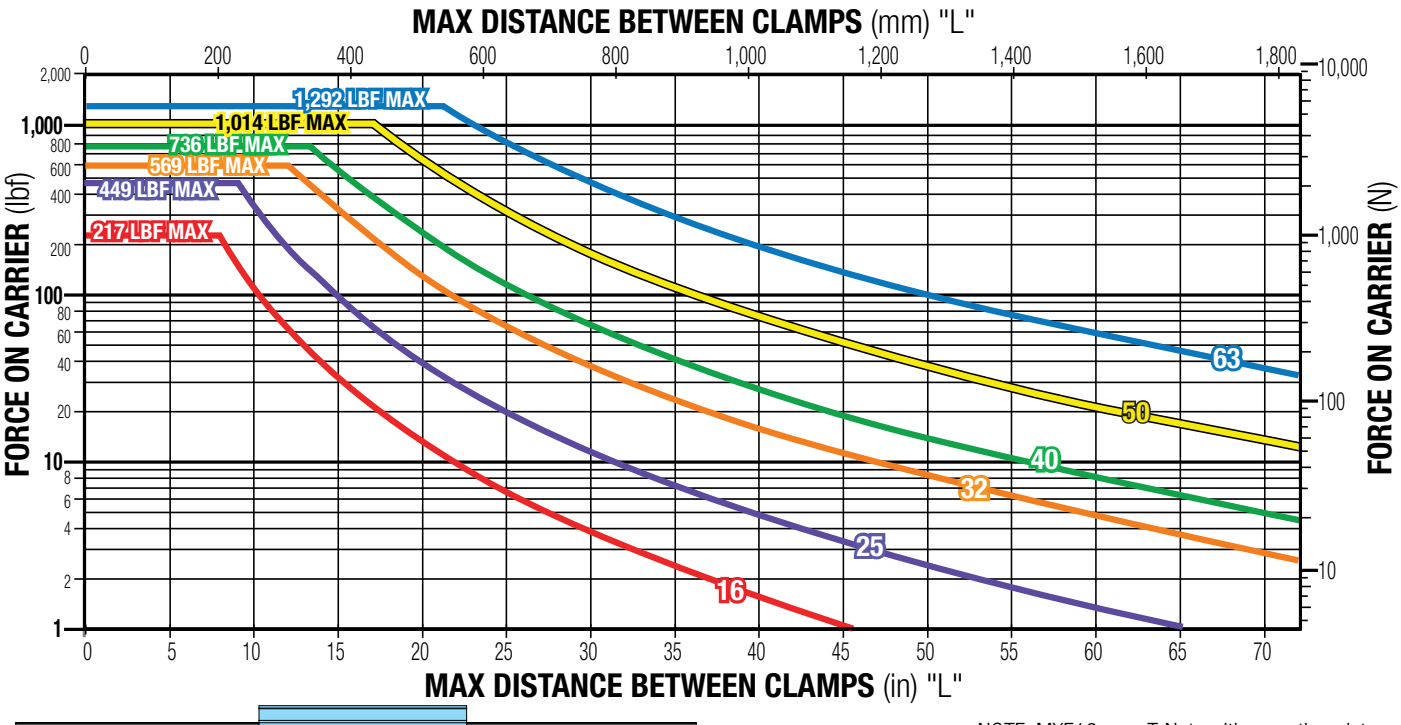

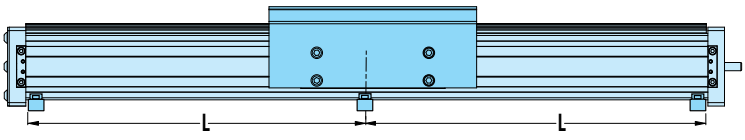

NOTE: MXE16 uses T-Nuts with mounting plates

SCREW CRITICAL SPEED CAPACITIES

sizeit.tolomatic.com for fast, accurate actuator selection

MXE ACME SCREW CRITICAL SPEED

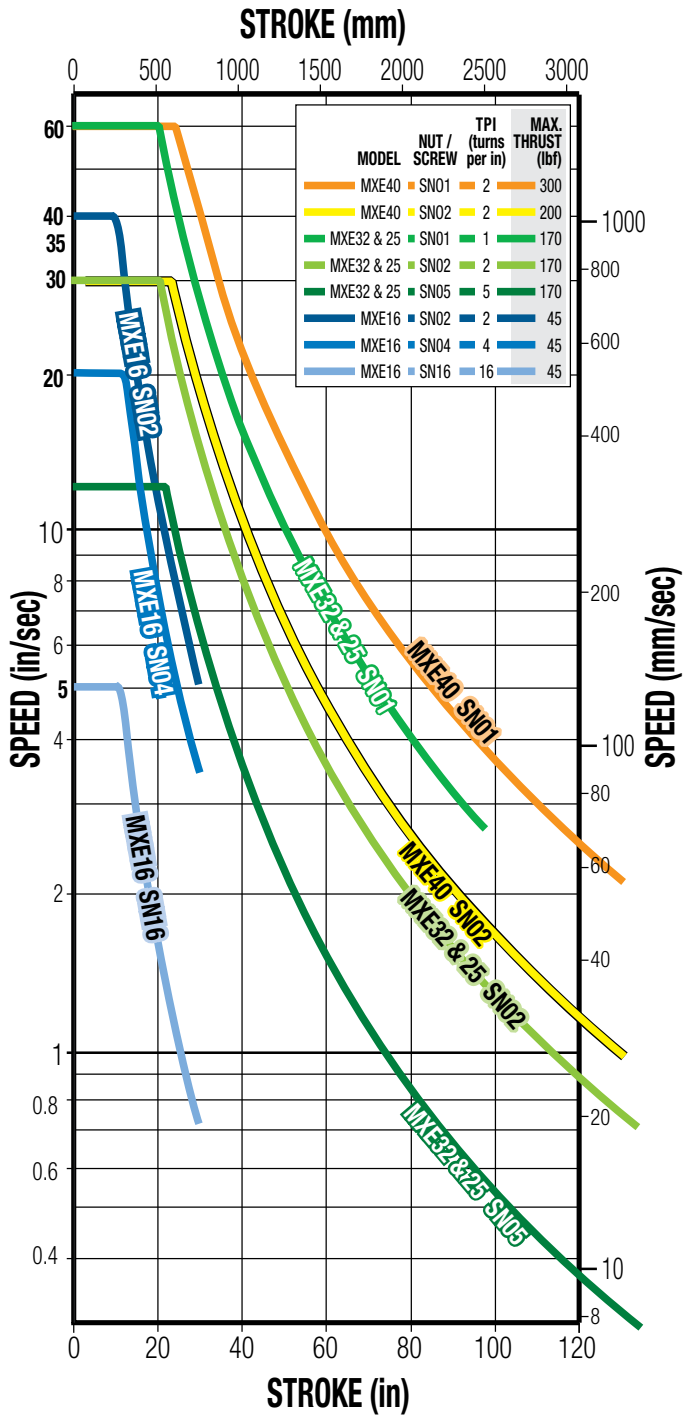

MXE BALL SCREW CRITICAL SPEED

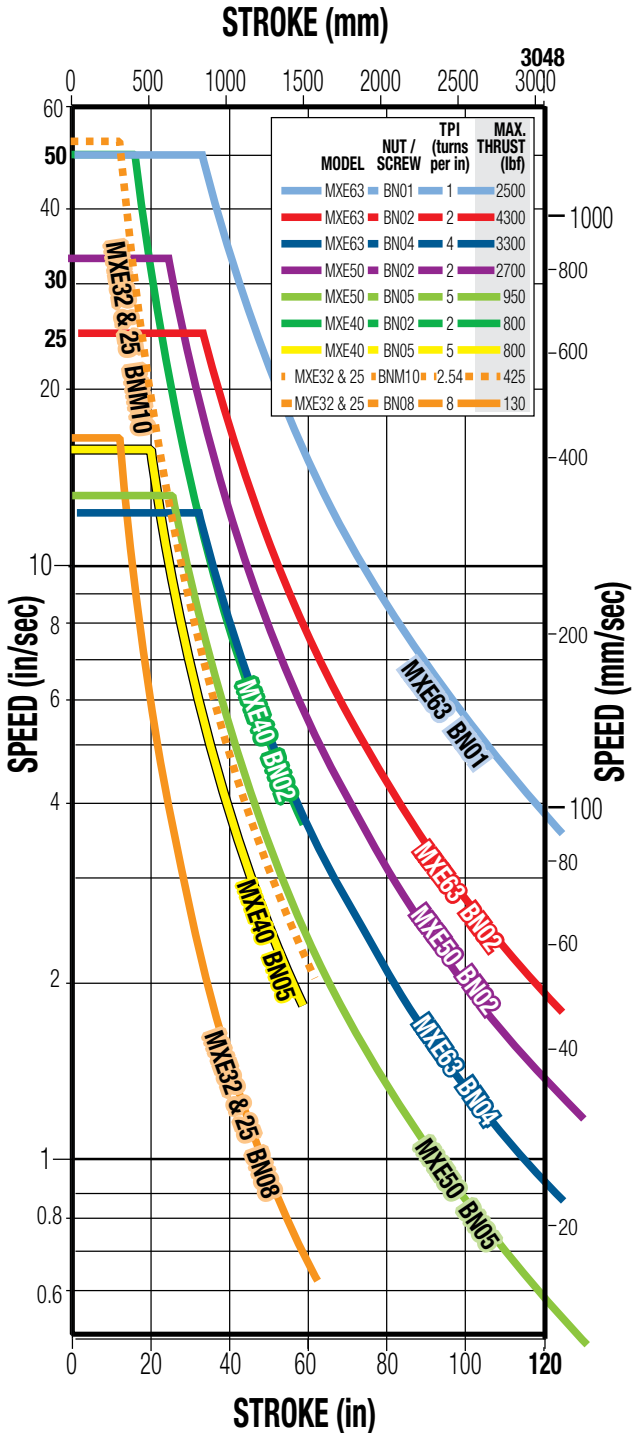

** Maximum thrust is the maximum continuous dynamic thrust subject to Thrust x Velocity limitation.*

Dotted lines represent maximum stroke for screw selections.

For Screw PV limits, refer to the individual charts on the following pages for each actuator body size.

SCREW CODE	DESCRIPTION
SN	Solid Nut
BN	Ball Nut
BNL	Low Backlash Ball Nut

MXE16, MXE25, MXE32, MXE40 ACME SCREW CRITICAL SPEED AND PV LIMITS

MXE16: Critical Speed: 0.250" ACME

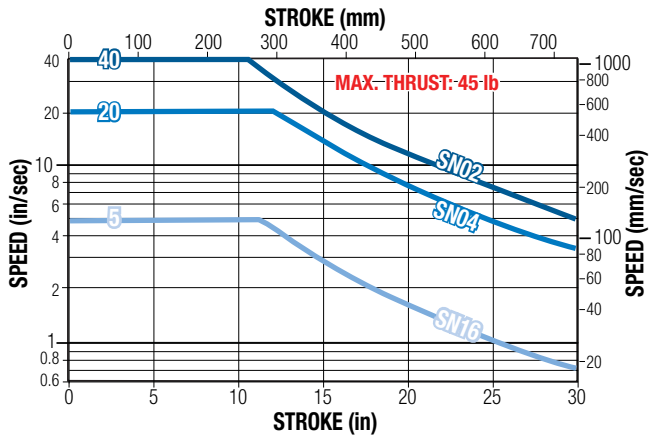

MXE16: PV Limits: Acme Screws

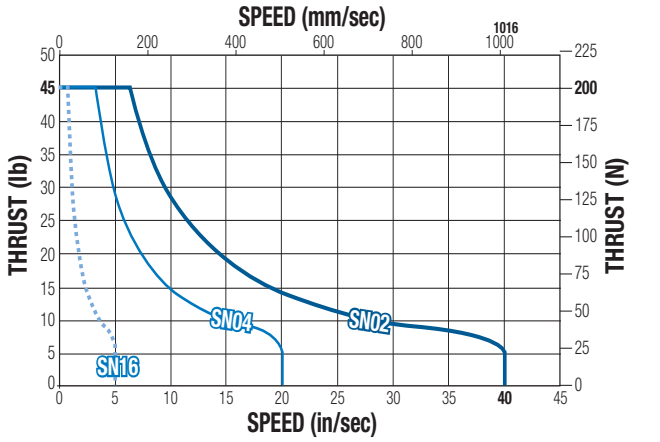

MXE25, MXE32: Critical Speed: 0.5" ACME

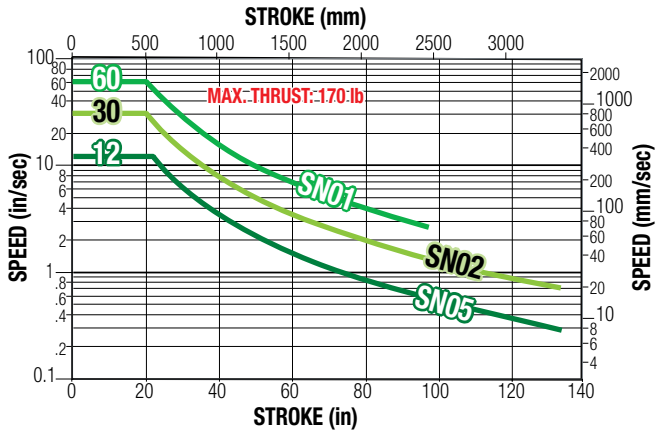

MXE25, MXE32: PV Limits: Acme Screws

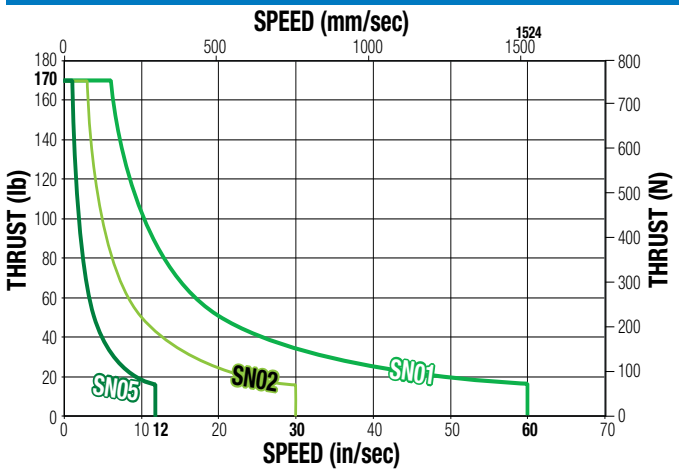

MXE40: Critical Speed: 0.625" & .75" ACME

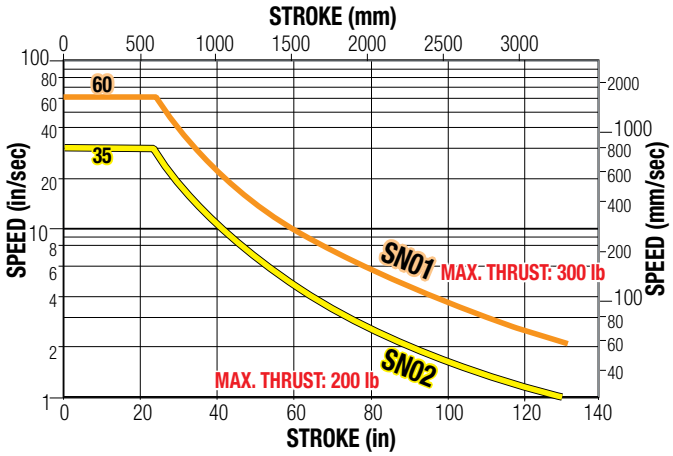

MXE40: PV Limits: Acme Screws

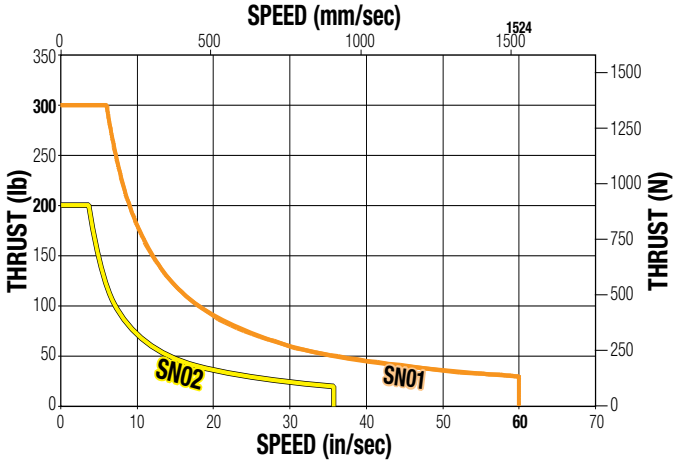

* Maximum thrust is the maximum continuous dynamic thrust subject to Thrust x Velocity Limitation.

SN = Solid Nut

PV LIMITS: Any material which carries a sliding load is limited by heat buildup. The factors that affect heat generation rate in an application are the pressure on the nut in pounds per square inch and the surface velocity in feet per minute. The product of these factors provides a measure of the severity of an application.

$$\left(\frac{P}{\text{Thrust (Max. Thrust Rating)}}\right) \times \left(\frac{V}{\text{Speed (Max. Speed Rating)}}\right) \leq 0.1$$

$$\left(\frac{P}{\text{Thrust (Max. Thrust Rating)}}\right) \times \left(\frac{V}{\text{Speed (Max. Speed Rating)}}\right) \leq 0.1$$

sizeit.tolomatic.com for fast, accurate actuator selection

tolomatic.com/ask Technical support before and after purchase

MXE25, MXE32, MXE40 BALL SCREW CRITICAL SPEED AND THEORETICAL LIFE

MXE25, MXE32: Critical Speed: Ball Screw

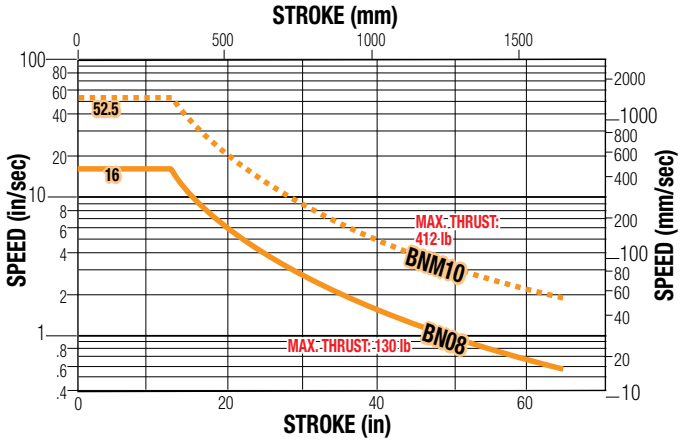

MXE25, MXE32: Life: Ball Screw

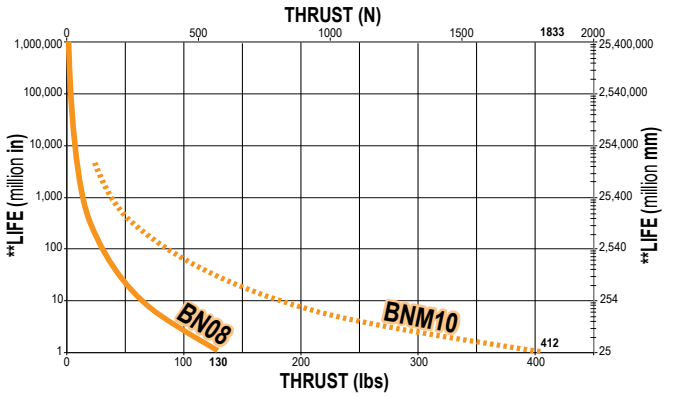

MXE40: Critical Speed: Ball Screw

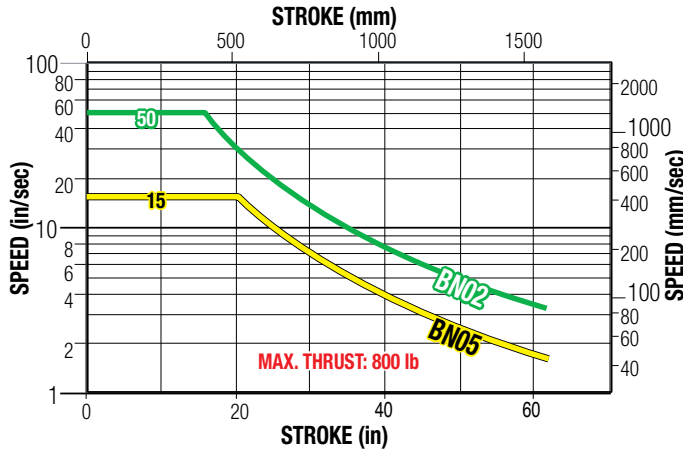

MXE40: Life: Ball Screws

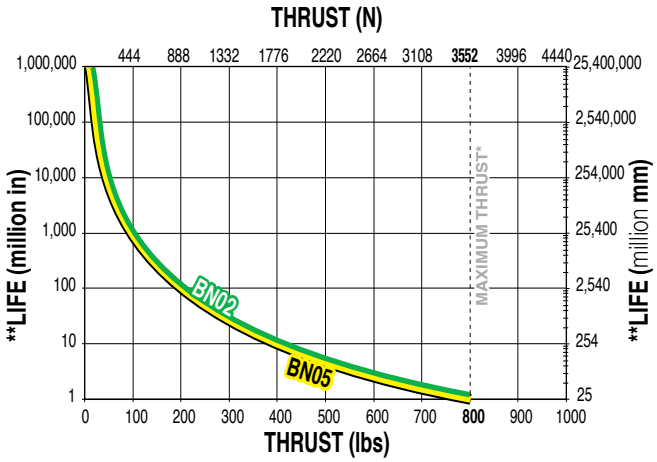

BN = Ball Nut

⚠ *Maximum thrust reflects 90% reliability for 25 million linear millimeters of travel.

**Life indicates theoretical maximum life of screw only, under ideal conditions and does not indicate expected life of actuator.

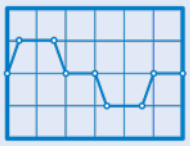

sizeit.tolomatic.com for fast, accurate actuator selection

sizeit.tolomatic.com for fast, accurate actuator selection or call Tolomatic (1-800-328-2174) with application information. We will provide any assistance needed to determine the proper MXE screw-driven actuator.



tolomatic.com/ask
Technical support before and after purchase

MXE50, MXE63 BALL SCREW CRITICAL SPEED AND THEORETICAL LIFE

MXE50: Critical Speed: Ball Screw

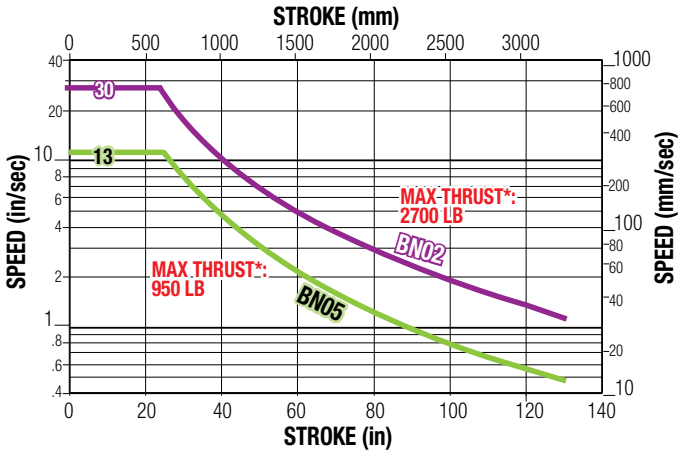

MXE50: Life: Ball Screw

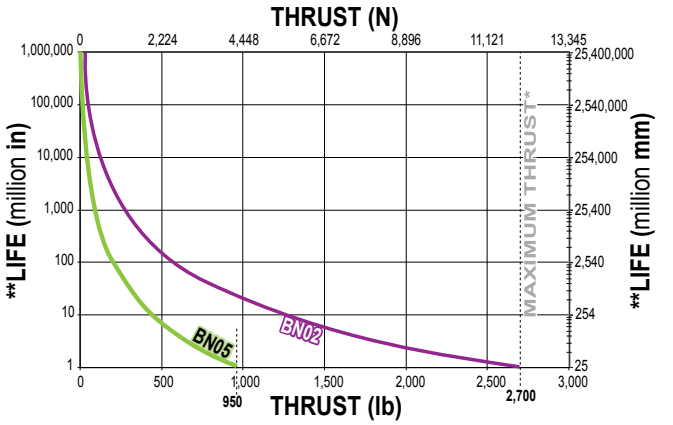

MXE63: Critical Speed: Ball Screw

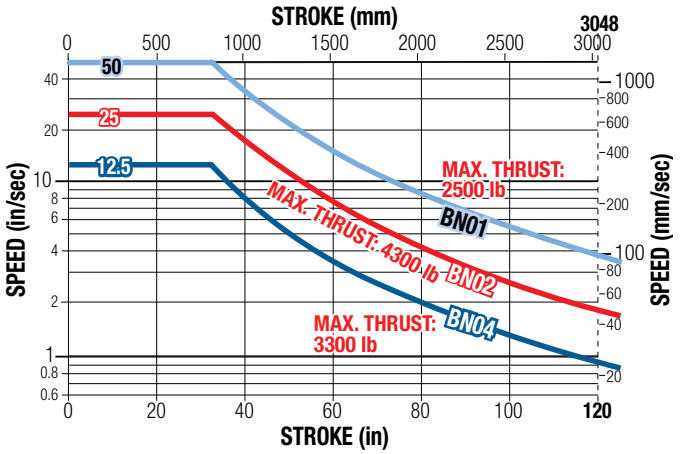

MXE63: Life: 1", Ball Screw

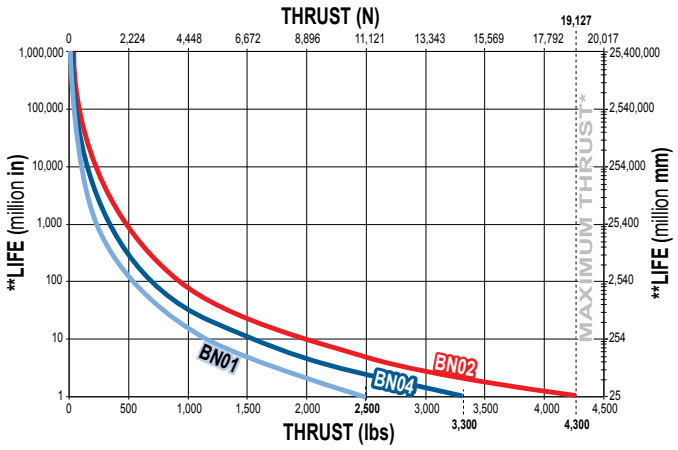

BN = Ball Nut

⚠ *Maximum thrust reflects 90% reliability for 25 million linear millimeters of travel.

**Life indicates theoretical maximum life of screw only, under ideal conditions and does not indicate expected life of actuator.

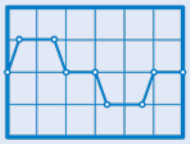

sizeit.tolomatic.com for fast, accurate actuator selection

sizeit.tolomatic.com for fast, accurate actuator selection or call Tolomatic (1-800-328-2174) with application information. We will provide any assistance needed to determine the proper MXE screw-driven actuator.



tolomatic.com/ask
Technical support before and after purchase

S-SOLID BEARING ACTUATOR DIMENSIONS

	MXE16	MXE25	MXE32	MXE40	MXE50	MXE63
A	69.1	96.3	100.9	125.2	141.7	211.3
B	72.1	100.6	105.1	130	147.8	216.2
C	12.7	23.4	12.7	16	33.3	47.8
D	42.2	57.2	55.4	75.9	88.1	110.0
E	48.0	58.4	77.8	89.2	112.8	139.7
F	40.1	55.4	72.6	88.2	104.1	142.0
G	21.1	24.1	30.7	39.1	46.2	58.4
H	35.1	47.5	47.5	-	-	-
I	8.1	7.6	7.6	-	-	-
J	16.8	25.7	25.7	-	-	-
K	33.3	Ø33.0	Ø33.0	Ø55.6	Ø68.3	Ø76.5
L	M3x0.5 (4)	M5x0.8 (8)	M5x0.8 (8)	M6x1.0 (4)	M6x1.0 (4)	M6x1.0 (4)
M	Ø4.78 (2)	Ø4.01 (2)	Ø4.01 (2)	Ø4.80 (2)	Ø4.78 (2)	Ø4.78 (2)
N	104.6	134.9	153	200	200.9	307.6
O	30.0	39.9	45	-	47.8	-
P	-	25.4	25.4	25.4	63.5	76.2
Q	-	27.2	28	41.3	31.8	38.1
R	-	M6x1.0 (2)	M8x1.25 (2)	M8x1.25 (2)	M10x1.5 (2)	M10x1.5 (2)
S	-	M6x1.0 (2)	M8x1.25 (2)	M8x1.25 (2)	M10x1.5 (2)	M10x1.5 (2)
T	M4x0.7 (6)	M6x1.0 (6)	M8x1.25 (6)	M8x1.25 (8)	M10x1.5 (6)	M10x1.5 (8)
U	30.0	30.0	44.0	51.0	65.8	82.6
V	-	-	-	Ø63.2	Ø76.5	Ø76.5
W	-	-	-	M5x0.8 (4)	M5x0.8 (4)	M5x0.8 (4)
X	-	-	-	15°	15°	15°
AA	30.00	42.00	55.37	64.00	78.74	100.00

Dimensions in millimeters

	MXE16	MXE25	MXE32	MXE40	MXE50	MXE63
A	2.72	3.79	3.97	4.93	5.58	8.32
B	2.84	3.96	4.14	5.12	5.82	8.51
C	0.50	0.92	0.50	0.63	1.31	1.88
D	1.66	2.25	2.18	2.99	3.47	4.33
E	1.89	2.30	3.06	3.51	4.44	5.50
F	1.58	2.18	2.86	3.47	4.10	5.59
G	0.83	0.95	1.21	1.54	1.82	2.30
H	1.38	1.87	1.87	-	-	-
I	0.32	0.30	0.30	-	-	-
J	0.66	1.01	1.01	-	-	-
K	1.31	Ø1.30	Ø1.30	Ø2.19	Ø2.69	Ø3.01
L	M3x0.5 (4)	M5x0.8 (8)	M5x0.8 (8)	M6x1.0 (4)	M6x1.0 (4)	M6x1.0 (4)
M	Ø.188 (2)	Ø.158 (2)	Ø.158 (2)	Ø.189 (2)	Ø.188 (2)	Ø.188 (2)
N	4.12	5.31	6.02	7.87	7.91	12.11
O	1.18	1.57	1.77	-	1.88	-
P	-	1.00	1.00	1.00	2.50	3.00
Q	-	1.07	1.10	1.63	1.25	1.50
R	-	1/4-20 (2)	1/4-20 (2)	1/4-20 (2)	3/8-16 (2)	3/8-16 (2)
S	-	#10-32 (2)	1/4-20 (2)	5/16-18 (2)	3/8-16 (2)	3/8-16 (2)
T	#8-32 (6)	1/4-20 (6)	1/4-20 (6)	5/16-18 (8)	3/8-16 (6)	3/8-16 (8)
U	1.18	1.18	1.73	2.00	2.59	3.25
V	-	-	-	Ø2.49	Ø3.01	Ø3.01
W	-	-	-	M5x0.8 (4)	M5x0.8 (4)	M5x0.8 (4)
X	-	-	-	15°	15°	15°
AA	1.18	1.65	2.18	2.52	3.10	3.94

Dimensions in inches

Y (Shaft length)	MXE16	MXE25	MXE32	MXE40	MXE50	MXE63
LMI	16.3	14.0	14.0	17.5	34.3	34.3
23 FRAME RP	46.1	50.5	50.5	50.5	53.3	48.8
34 FRAME RP	-	55.9	55.9	55.9	53.3	48.8
56 FRAME RP	-	-	-	-	-	48.8
Z (Shaft dia.)	**MXE16**	**MXE25**	**MXE32**	**MXE40**	**MXE50**	**MXE63**
LMI (BN02)	3.96	6.35	6.35	7.92	12.70	–
LMI (all others)	3.96	6.35	6.35	9.98	12.70	12.70
RP (BN02)	3.96	6.35	6.35	6.35	12.70	12.70
RP (all others)	3.96	6.35	6.35	9.53	12.70	12.70

Dimensions in millimeters

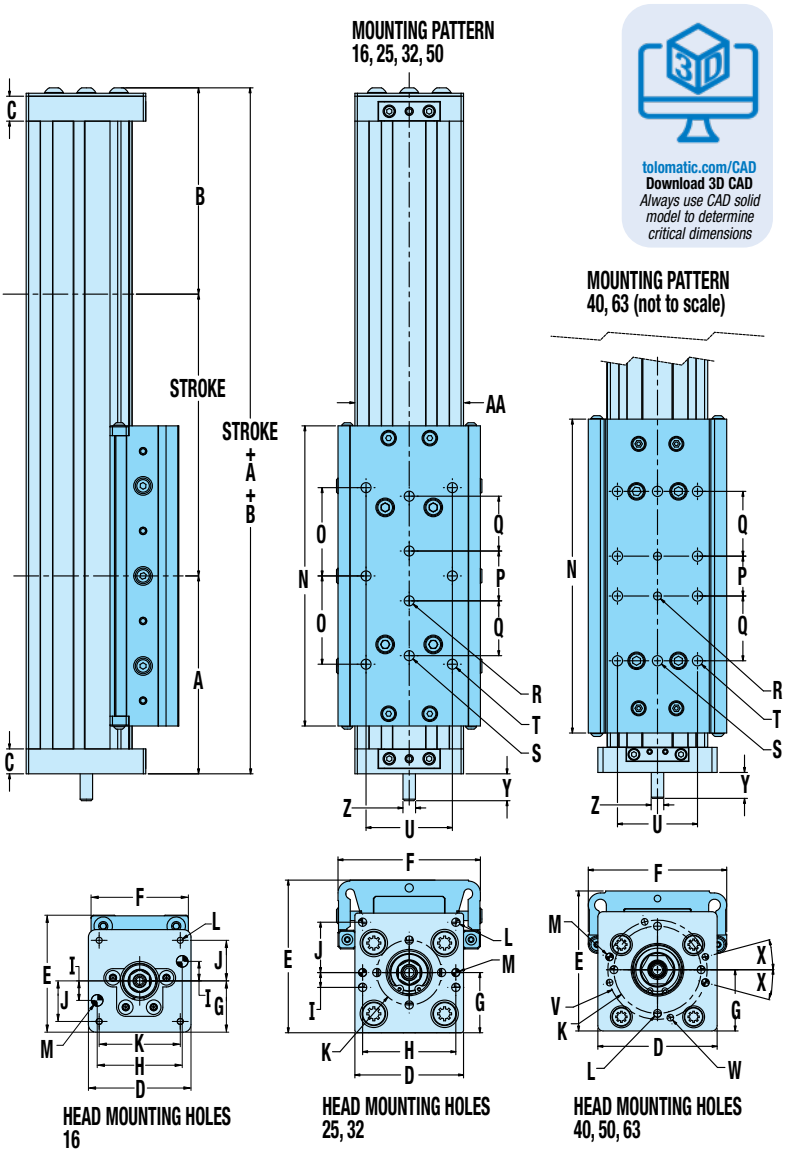

tolomatic.com/CAD
Download 3D CAD
Always use CAD solid model to determine critical dimensions

Y (Shaft length)	MXE16	MXE25	MXE32	MXE40	MXE50	MXE63
LMI	0.64	0.55	0.55	0.69	1.35	1.35
23 FRAME RP	1.82	1.99	1.99	1.99	2.10	1.92
34 FRAME RP	-	2.20	2.20	2.20	2.10	1.92
56 FRAME RP	-	-	-	-	-	1.92
Z (Shaft dia.)	**MXE16**	**MXE25**	**MXE32**	**MXE40**	**MXE50**	**MXE63**
LMI (BN02)	0.156	0.25	0.25	0.312	0.5	–
LMI (all others)	0.156	0.25	0.25	0.393	0.5	0.5
RP (BN02)	0.156	0.25	0.25	0.25	0.5	0.5
RP (all others)	0.156	0.25	0.25	0.375	0.5	0.5

Dimensions in inches

S-SOLID BEARING OPTION DIMENSIONS

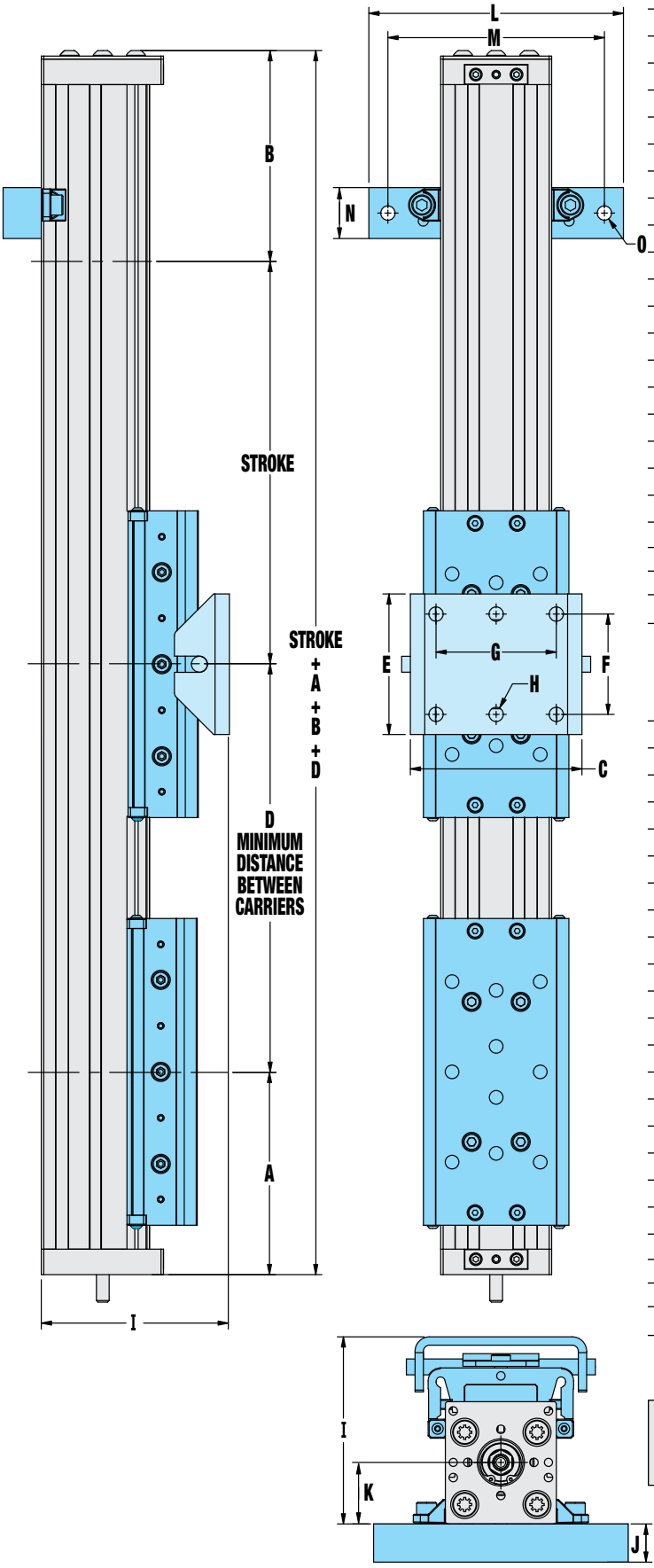

	MXE16	MXE25	MXE32	MXE40	MXE50	MXE63
A	69.1	96.3	100.9	125.2	141.7	211.3
B	72.1	100.6	105.1	130	147.8	216.2
AUXILIARY CARRIER						
D	127.0	152.4	177.8	215.9	218.4	330.2
FLOATING MOUNT						
C	47.2	64.1	93.3	109.7	128.0	154.9
E	24.9	31.8	70.1	100.0	100.0	127.0
F	11.9	15.9	50.0	74.9	80.0	100.1
G	-	-	-	55.1	-	70.1
H*	Ø4.6 (2)	Ø6.1 (2)	Ø7.1 (2)	Ø7.1 (4)	Ø9.1 (2)	Ø8.6 (4)
I	57.9	71.0	93.3	108.2	133.1	156.7
MOUNTING PLATE/TUBE CLAMP KITS						
J**	12.7	25.4	19.1	16.0	31.8	25.4
J***	-	35.1	28.7	25.4	31.8	25.4
K	21.1	24.1	30.7	39.1	46.2	58.4
L	63.5	101.6	127.0	127.0	142.2	203.2
M	47.8	86.0	108.0	112.0	127.0	177.8
N	25.4	25.4	25.4	20.0	20.0	25.4
O	Ø5.6 (2)	Ø5.6 (2)	Ø7.1 (2)	Ø7.1 (2)	Ø7.1 (2)	Ø10.7 (2)

Dimensions in millimeters

* MXE16, MXE25, MXE32 & MXE50 USE 2 CENTER HOLES, MXE40 & MXE63 USE 4 CORNER HOLES

** MOUNTING PLATE THICKNESS FOR 23 FRAME MOTORS

*** MOUNTING PLATE THICKNESS FOR 34 FRAME MOTORS (AND 56 FRAME MOTORS ON MXE63)

	MXE16	MXE25	MXE32	MXE40	MXE50	MXE63
A	2.72	3.79	3.97	4.93	5.58	8.32
B	2.84	3.96	4.14	5.12	5.82	8.51
AUXILIARY CARRIER						
D	5.00	6.00	7.00	8.50	8.60	13.00
FLOATING MOUNT						
C	1.86	2.52	3.37	4.32	5.04	6.10
E	0.98	1.25	2.76	3.94	3.94	5.00
F	0.47	0.63	1.97	2.95	3.15	3.94
G	-	-	-	2.17	-	2.76
H*	Ø.18 (2)	Ø.24 (2)	Ø.28 (2)	Ø.28 (4)	Ø.36 (2)	Ø.34 (4)
I	2.28	2.80	3.67	4.26	5.24	6.17
MOUNTING PLATE/TUBE CLAMP KITS						
J**	0.50	1.00	0.75	0.63	1.25	1.00
J***	-	1.38	1.13	1.00	1.25	1.00
K	0.83	0.95	1.21	1.54	1.82	2.30
L	2.50	4.00	5.00	5.00	5.60	8.00
M	1.88	3.39	4.25	4.41	5.00	7.00
N	1.00	1.00	1.00	0.79	0.79	1.00
O	Ø.22 (2)	Ø.22 (2)	Ø.28 (2)	Ø.28 (2)	Ø.28 (2)	Ø.42 (2)

Dimensions in inches

* MXE16, MXE25, MXE32 & MXE50 USE 2 CENTER HOLES, MXE40 & MXE63 USE 4 CORNER HOLES

** MOUNTING PLATE THICKNESS FOR 23 FRAME MOTORS

*** MOUNTING PLATE THICKNESS FOR 34 FRAME MOTORS (AND 56 FRAME MOTORS ON MXE63)

NOTE: MXE16 uses MP (mounting plate) with included T-nuts

tolomatic.com/CAD
Download 3D CAD
Always use CAD solid model to determine critical dimensions

P-PROFILED RAIL ACTUATOR DIMENSIONS

	MXE16	MXE25	MXE32	MXE40	MXE50	MXE63
A	69.1	96.3	100.9	125.2	141.7	211.3
B	72.1	100.6	105.1	130.0	147.8	216.2
C	12.7	23.4	12.7	16.0	33.3	47.8
D	42.2	57.2	55.4	75.9	88.0	110.0
E	52.1	66.1	77.4	95.7	124.5	145.0
F	45.7	67.4	82.6	97.8	117.3	143.5
G	21.1	24.1	30.7	39.1	46.2	58.4
H	35.1	47.5	47.5	-	-	-
I	8.1	7.6	7.6	-	-	-
J	16.8	25.7	25.7	-	-	-
K	33.3	Ø33.0	Ø33.0	Ø55.6	Ø68.3	Ø55.6
L	M3x0.5 (4)	M5x0.8 (8)	M5x0.8 (8)	M6x1.0 (4)	M6x1.0 (4)	M6x1.0 (4)
M	Ø4.78 (2)	Ø4.01 (2)	Ø4.01 (2)	Ø4.80 (2)	Ø4.78 (2)	Ø4.78 (2)
N	110.0	135.0	170.0	200	215.9	207.6
O	40.0	40.0	27.2	25.4	25.4	39.9
P	-	-	85.6	114.3	69.9	130.0
Q	M4x0.7 (6)	M6x1.0 (6)	M8x1.25 (8)	M8x1.25 (8)	M8x1.25 (8)	M10x1.5 (8)
R	28.00	40.00	50.00	72.00	79.38	98.30
S	-	-	-	Ø63.2	Ø76.5	Ø76.5
T	-	-	-	M5x0.8 (4)	M5x0.8 (4)	M5x0.8 (4)
U	-	-	-	15°	15°	15°
V	40.00	40.00	45.00	63.50	38.10	65.00
W*	Ø4.045 / 4.020 ↧ 6.35	Ø6.045 / 6.020 ↧ 6.35	Ø8.045 /8.020 ↧ 9.53	Ø8.045 /8.020 ↧ 12.70	Ø8.045 /8.020 ↧ 12.70	Ø10.045 /10.020 ↧ 12.70
X	46.0	58.5	77.4	89.7	119.7	140.0
AA	30.00	40.00	54.00	64.00	78.74	100.00
BB	35.50	48.60	62.87	73.50	93.74	115.00

Dimensions in millimeters

*DOWEL HOLES ⌖ 0.003 in Ⓜ ⌖ *0.08 mm* Ⓜ

	MXE16	MXE25	MXE32	MXE40	MXE50	MXE63
A	2.72	3.79	3.97	4.93	5.58	8.32
B	2.84	3.96	4.14	5.12	5.82	8.51
C	0.50	0.92	0.50	0.63	1.31	1.88
D	1.66	2.25	2.18	2.99	3.47	4.33
E	2.05	2.60	3.05	3.77	4.90	5.71
F	1.80	2.65	3.25	3.85	4.62	5.65
G	0.83	0.95	1.21	1.54	1.82	2.30
H	1.38	1.87	1.87	-	-	-
I	0.32	0.30	0.30	-	-	-
J	0.66	1.01	1.01	-	-	-
K	1.31	Ø1.30	Ø1.30	Ø2.19	Ø2.69	Ø2.19
L	M3x0.5 (4)	M5x0.8 (8)	M5x0.8 (8)	M6x1.0 (4)	M6x1.0 (4)	M6x1.0 (4)
M	Ø.188 (2)	Ø.158 (2)	Ø.158 (2)	Ø.189 (2)	Ø.188 (2)	Ø.188 (2)
N	4.33	5.31	6.69	7.87	8.50	12.11
O	1.58	1.57	1.07	1.00	1.00	1.57
P	-	-	3.37	4.50	2.75	5.12
Q	#8-32 (6)	1/4-20 (6)	5/16-18 (8)	5/16-18 (8)	5/16-18 (8)	3/8-16 (8)
R	1.102	1.575	1.969	2.835	3.125	3.870
S	-	-	-	Ø2.49	Ø3.01	Ø3.01
T	-	-	-	M5x0.8 (4)	M5x0.8 (4)	M5x0.8 (4)
U	-	-	-	15°	15°	15°
V	1.575	1.575	1.772	2.500	1.500	2.559
W*	Ø.1583 / .1573 (2) ↧ .250	Ø.2520 / .2510 (2) ↧ .250	Ø.3145 / .3135 (2) ↧ .375	Ø.3145 / .3135 (2) ↧ .500	Ø.3145 / .3135 (2) ↧ .500	Ø.3770 / .3760 (2) ↧ .500
X	1.81	2.30	3.05	3.53	4.71	5.51
AA	1.18	1.58	2.13	2.52	3.10	3.94
BB	1.40	1.91	2.48	2.89	3.69	4.53

Dimensions in inches

Y (Shaft length)	MXE16	MXE25	MXE32	MXE40	MXE50	MXE63
LMI	16.3	14	14	17.5	34.3	34.3
23 FRAME RP	46.1	50.5	50.5	50.5	53.3	48.8
34 FRAME RP	-	55.9	55.9	55.9	53.3	48.8
56 FRAME RP	-	-	-	-	-	48.8
Z (Shaft dia.)	MXE16	MXE25	MXE32	MXE40	MXE50	MXE63
LMI (BN02)	3.96	6.35	6.35	7.92	12.70	–
LMI (all others)	3.96	6.35	6.35	9.98	12.70	12.70
RP (BN02)	3.96	6.35	6.35	6.35	12.70	12.70
RP (all others)	3.96	6.35	6.35	9.53	12.70	12.70

Dimensions in millimeters

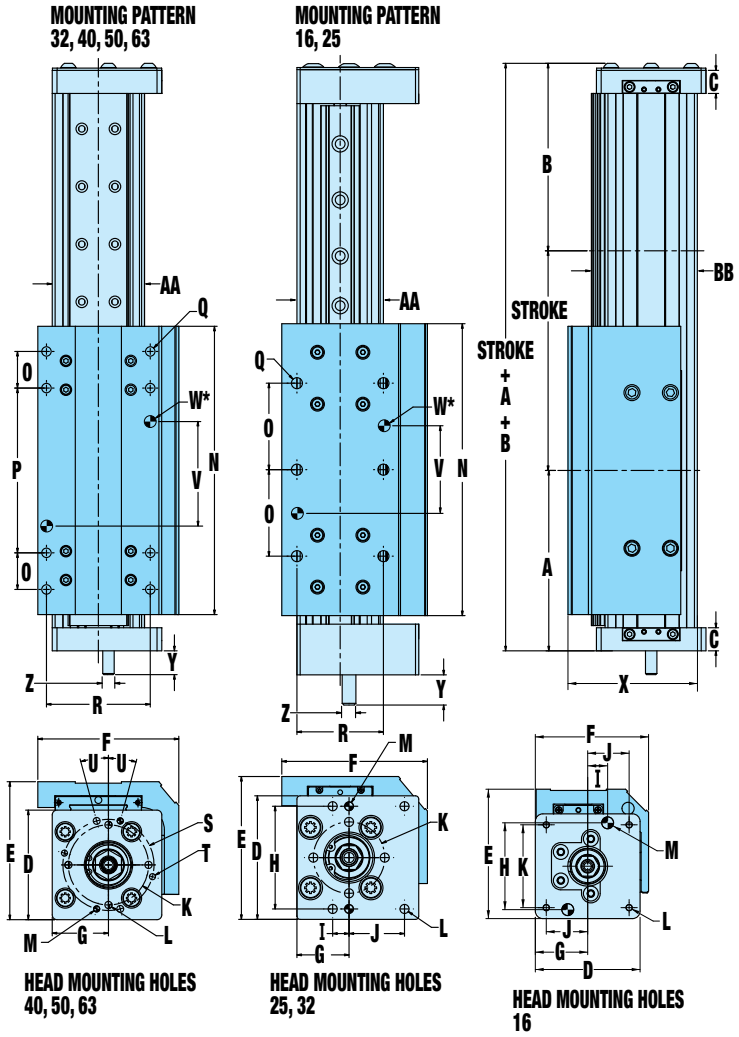

Y (Shaft length)	MXE16	MXE25	MXE32	MXE40	MXE50	MXE63
LMI	0.64	0.55	0.55	0.69	1.35	1.35
23 FRAME RP	1.82	1.99	1.99	1.99	2.10	1.92
34 FRAME RP	-	2.2	2.2	2.2	2.10	1.92
56 FRAME RP	-	-	-	-	-	1.92
Z (Shaft dia.)	MXE16	MXE25	MXE32	MXE40	MXE50	MXE63
LMI (BN02)	0.156	0.25	0.25	0.312	0.5	–
LMI (all others)	0.156	0.25	0.25	0.393	0.5	0.5
RP (BN02)	0.156	0.25	0.25	0.25	0.5	0.5
RP (all others)	0.156	0.25	0.25	0.375	0.5	0.5

Dimensions in inches

P-PROFILED RAIL OPTION DIMENSIONS

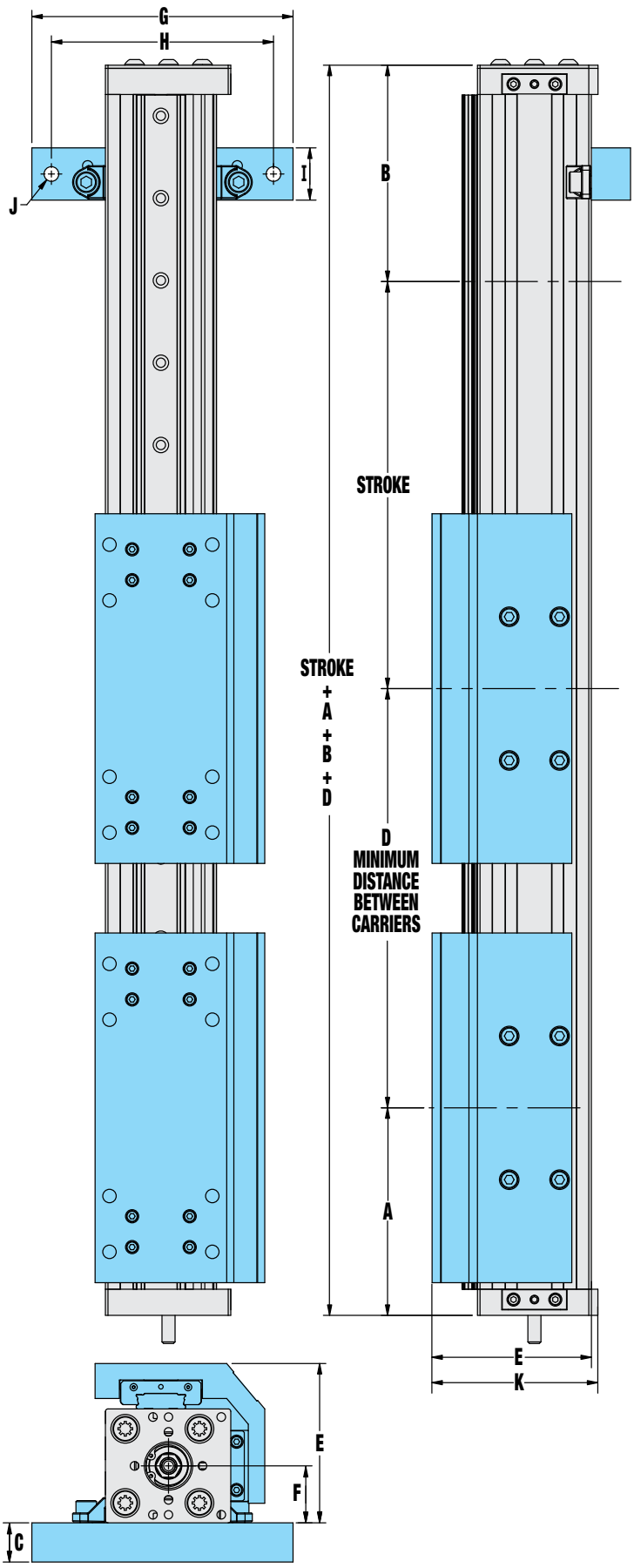

	MXE16	MXE25	MXE32	MXE40	MXE50	MXE63
A	69.1	96.3	100.9	125.2	141.7	211.3
B	72.1	100.6	105.1	130	147.8	216.2
AUXILIARY CARRIER						
D	127.0	152.4	177.8	215.9	218.4	330.2
MOUNTING PLATE/TUBE CLAMP KITS						
C*	12.7	25.4	19.1	16.0	31.8	25.4
C**	-	35.1	28.7	25.4	31.8	25.4
E	46.0	58.5	77.4	89.7	119.7	140.0
F	21.1	24.1	30.7	39.1	46.2	58.4
G	63.5	101.6	127.0	127.0	142.2	203.2
H	47.8	86.0	108.0	112.0	127.0	177.8
I	25.4	25.4	25.4	20.0	20.0	25.4
J	Ø5.6 (2)	Ø5.6 (2)	Ø7.1 (2)	Ø7.1 (2)	Ø7.1 (2)	Ø10.7 (2)
K	52.1	66.1	77.4	95.7	124.5	145.0

Dimensions in millimeters

* MOUNTING PLATE THICKNESS FOR 23 FRAME MOTORS

** MOUNTING PLATE THICKNESS FOR 34 FRAME MOTORS (AND 56 FRAME MOTORS ON MXE63)

	MXE16	MXE25	MXE32	MXE40	MXE50	MXE63
A	2.72	3.79	3.97	4.93	5.58	8.32
B	2.84	3.96	4.14	5.12	5.82	8.51
AUXILIARY CARRIER						
D	5.00	6.00	7.00	8.50	8.60	13.00
MOUNTING PLATE/TUBE CLAMP KITS						
C*	0.50	1.00	0.75	0.63	1.25	1.00
C**	-	1.38	1.13	1.00	1.25	1.00
E	1.81	2.30	3.05	3.53	4.71	5.51
F	0.83	0.95	1.21	1.54	1.82	2.30
G	2.50	4.00	5.00	5.00	5.60	8.00
H	1.88	3.39	4.25	4.41	5.00	7.00
I	1.00	1.00	1.00	0.79	0.79	1.00
J	Ø.22 (2)	Ø.22 (2)	Ø.28 (2)	Ø.28 (2)	Ø.28 (2)	Ø.42 (2)
K	2.05	2.60	3.05	3.77	4.90	5.71

Dimensions in inches

* MOUNTING PLATE THICKNESS FOR 23 FRAME MOTORS

** MOUNTING PLATE THICKNESS FOR 34 FRAME MOTORS (AND 56 FRAME MOTORS ON MXE63)

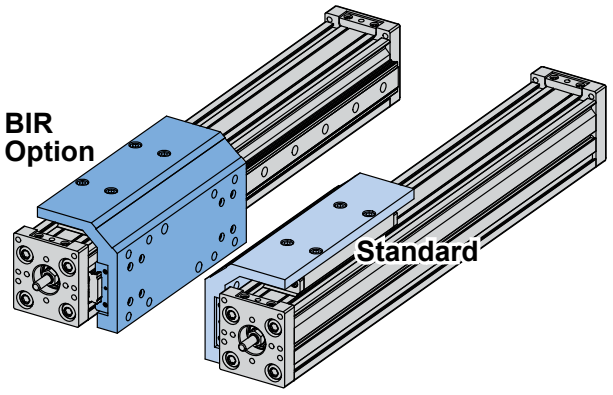

tolomatic.com/CAD
Download 3D CAD
Always use CAD solid model to determine critical dimensions

REVERSE PARALLEL MOTOR MOUNTING

S-SOLID BEARING

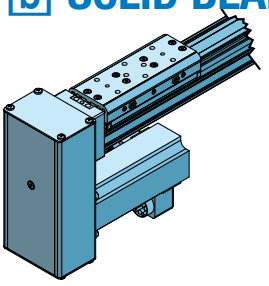

REVERSE-PARALLEL BOTTOM (RPB)
mounting surface shown UP

BOTTOM MOUNT

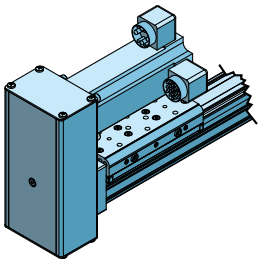

REVERSE-PARALLEL TOP (RPT)
mounting surface shown UP

TOP MOUNT

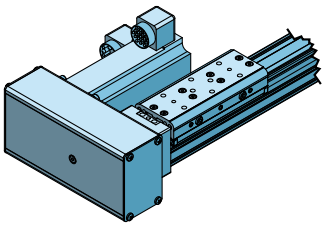

REVERSE-PARALLEL LEFT (RPL)
mounting surface shown UP

SIDE MOUNT (Left Shown)

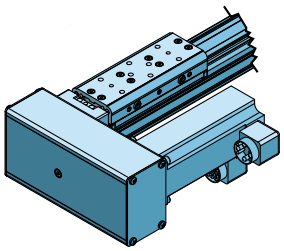

REVERSE-PARALLEL RIGHT (RPR)
mounting surface shown UP

SIDE MOUNT (Right Shown)

		WEIGHT OF REDUCTION DRIVE				REDUCTION INERTIA AT MOTOR SHAFT			
		1:1	2:1	1:1	2:1	1:1	2:1	1:1	2:1
ACTUATOR	**MOTOR**	kg	kg	*lbs*	*lbs*	kg-cm²	kg-cm²	*lb-in²*	*lb-in²*
MXE16S	ALL FRAME SIZE MOTORS	0.25	0.27	*0.55*	*0.58*	0.0029	0.0059	*0.001*	*0.002*
MXE25S	ALL FRAME SIZE MOTORS	0.93	0.93	*2.06*	*2.06*	0.2559	0.3291	*0.087*	*0.112*
MXE32S	ALL FRAME SIZE MOTORS	0.93	0.93	*2.06*	*2.06*	0.2559	0.3291	*0.087*	*0.112*
MXE40S	ALL FRAME SIZE MOTORS	0.93	0.93	*2.06*	*2.06*	0.2559	0.3291	*0.087*	*0.112*
MXE50S	NEMA 23-FRAME SIZE MOTOR	1.58	2.00	*3.49*	*4.41*	0.2634	0.7433	*0.090*	*0.254*
	NEMA 34-FRAME SIZE MOTOR	1.80	2.21	*3.96*	*4.86*	0.2634	0.7433	*0.090*	*0.254*
MXE63S	NEMA 23-FRAME SIZE MOTOR	1.58	2.00	*3.49*	*4.41*	0.2634	0.7433	*0.090*	*0.254*
	NEMA 34-FRAME SIZE MOTOR	1.79	2.19	*3.94*	*4.84*	0.2546	0.7345	*0.087*	*0.251*
	NEMA 56-FRAME SIZE MOTOR	1.91	2.31	*4.20*	*5.10*	0.2546	0.7345	*0.087*	*0.251*

REDUCTION EFFICIENCY: 0.95

tolomatic.com/CAD
Download 3D CAD
Always use CAD solid model to determine critical dimensions

P-PROFILED RAIL BEARING

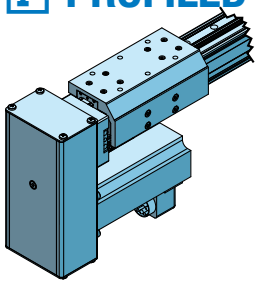

REVERSE-PARALLEL BOTTOM (RPB)
mounting surface shown UP

BOTTOM MOUNT

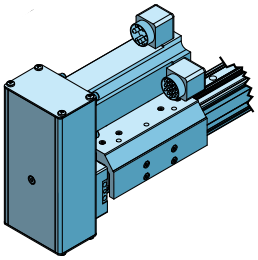

REVERSE-PARALLEL TOP (RPT)
mounting surface shown UP

TOP MOUNT

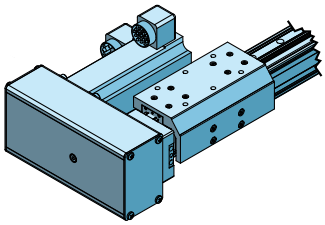

REVERSE-PARALLEL LEFT (RPL)
mounting surface shown UP

SIDE MOUNT (Left Shown)

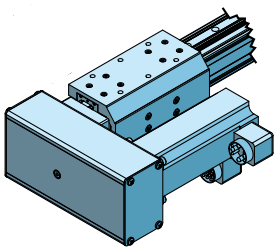

REVERSE-PARALLEL RIGHT (RPR)
mounting surface shown UP

SIDE MOUNT (Right Shown)

		WEIGHT OF REDUCTION DRIVE				REDUCTION INERTIA AT MOTOR SHAFT			
		1:1	2:1	1:1	2:1	1:1	2:1	1:1	2:1
ACTUATOR	**MOTOR**	kg	kg	*lbs*	*lbs*	kg-cm²	kg-cm²	*lb-in²*	*lb-in²*
MXE16P	ALL FRAME SIZE MOTORS	0.25	0.27	*0.55*	*0.58*	0.0029	0.0059	*0.001*	*0.002*
MXE25P	ALL FRAME SIZE MOTORS	0.93	0.93	*2.06*	*2.06*	0.2559	0.3291	*0.087*	*0.112*
MXE32P	ALL FRAME SIZE MOTORS	0.93	0.93	*2.06*	*2.06*	0.2559	0.3291	*0.087*	*0.112*
MXE40P	ALL FRAME SIZE MOTORS	0.93	0.93	*2.06*	*2.06*	0.2559	0.3291	*0.087*	*0.112*
MXE50P	NEMA 23-FRAME SIZE MOTOR	1.58	2.00	*3.49*	*4.41*	0.2634	0.7433	*0.090*	*0.254*
	NEMA 34-FRAME SIZE MOTOR	1.80	2.21	*3.96*	*4.86*	0.2634	0.7433	*0.090*	*0.254*
MXE63P	NEMA 23-FRAME SIZE MOTOR	1.58	2.00	*3.49*	*4.41*	0.2634	0.7433	*0.090*	*0.254*
	NEMA 34-FRAME SIZE MOTOR	1.79	2.19	*3.94*	*4.84*	0.2546	0.7345	*0.087*	*0.251*
	NEMA 56-FRAME SIZE MOTOR	1.91	2.31	*4.20*	*5.10*	0.2546	0.7345	*0.087*	*0.251*

REDUCTION EFFICIENCY: 0.95

tolomatic.com/ask
Technical support before and after purchase

SWITCHES

SPECIFICATIONS



RoHS COMPLIANT CE

MX products offer a wide range of sensing choices. There are 12 switch choices: reed, solid state PNP (sourcing) or solid state NPN (sinking); in normally open or normally closed; with flying leads or quick-disconnect.

Commonly used for end-of-stroke positioning, these switches allow drop-in installation anywhere along the entire actuator length. The one-piece design includes the retained fastening hardware and is designed for any open side or bottom slot on the MX. The internal piston magnet is a standard feature, therefore these switches can be installed in the field at any time.

Switches are used to send digital signals to PLC (programmable logic controller), TTL, CMOS circuit or other controller device. Switches contain reverse polarity protection. Solid state QD cables are shielded; shield should be terminated at flying lead end.

All switches are CE rated and are RoHS compliant. Switches feature bright red or yellow LED signal indicators; solid state switches also have green LED power indicators.

	Order Code	Lead	Switching Logic	Power LED	Signal LED	Operating Voltage	**Power Rating (Watts)	Switching Current (mA max.)	Current Consumption	Voltage Drop	Leakage Current	Temp. Range	Shock / Vibration
REED	RY	5m	SPST Normally Open	—	Red	5 - 240 AC/DC	**10.0	100mA	—	3.0 V max.	—	14 to 158°F [-10 to 70°C]	50 G / 9 G
	RK	QD*		Tolomatic 81009082									
	NY	5m	SPST Normally Closed	—	Yellow	5 - 110 AC/DC							
	NK	QD*		Tolomatic 81009084									
SOLID STATE	TY	5m	PNP (Sourcing) Normally Open	Green	Yellow	10 - 30 VDC	**3.0	100mA	20 mA @ 24V	2.0 V max.	0.05 mA max.		
	TK	QD*		Tolomatic 81009088									
	KY	5m	NPN (Sinking) Normally Open	Green	Red								
	KK	QD*		Tolomatic 81009090									
	PY	5m	PNP (Sourcing) Normally Closed	Green	Yellow								
	PK	QD*		Tolomatic 81009092									
	HY	5m	NPN (Sinking) Normally Closed	Green	Red								
	HK	QD*		Tolomatic 81009094									

*QD = Quick-disconnect Enclosure classification IEC 529 IP67 (NEMA 6) CABLES: Robotic grade, oil resistant polyurethane jacket, PVC insulation

⚠**WARNING: Do not exceed power rating (Watt = Voltage x Amperage). Permanent damage to sensor will occur.

WIRING DIAGRAMS

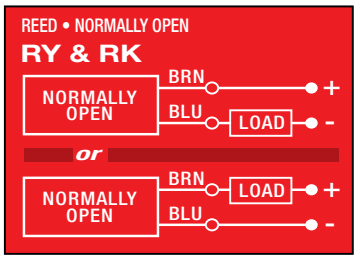

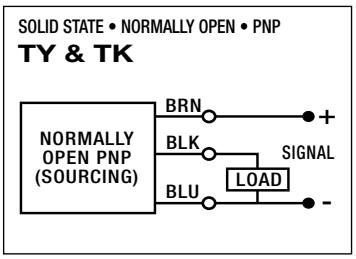

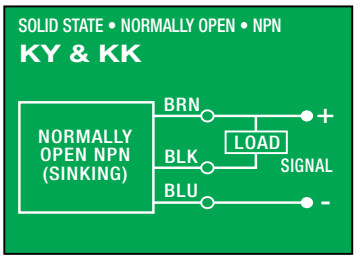

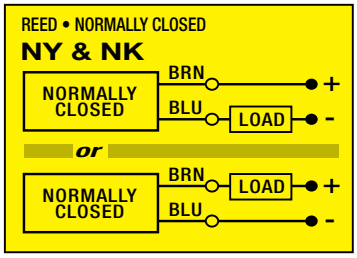

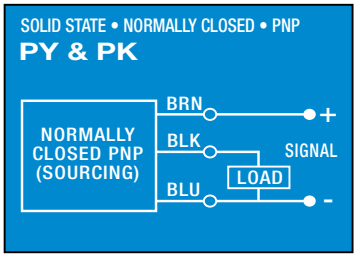

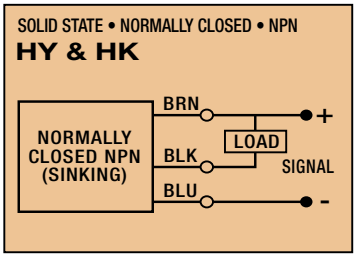

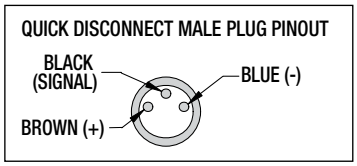

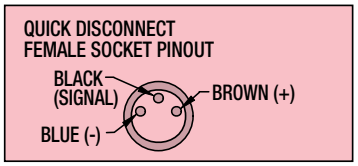

SWITCH INSTALLATION AND REPLACEMENT

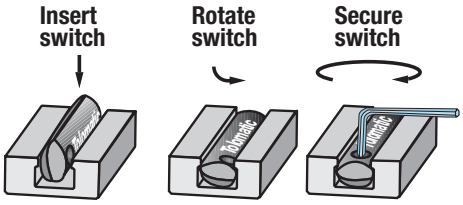

Place switch in side groove on tube at desired location with "Tolomatic" facing outward. While applying light pressure to the switch, rotate the switch is halfway into the groove. Maintaining light pressure, rotate the switch in the opposite direction until it is fully inside the groove with "Tolomatic" visible. Re-position the switch to the exact location and lock the switch securely into place by tightening the screw on the switch.

SWITCH DIMENSIONS

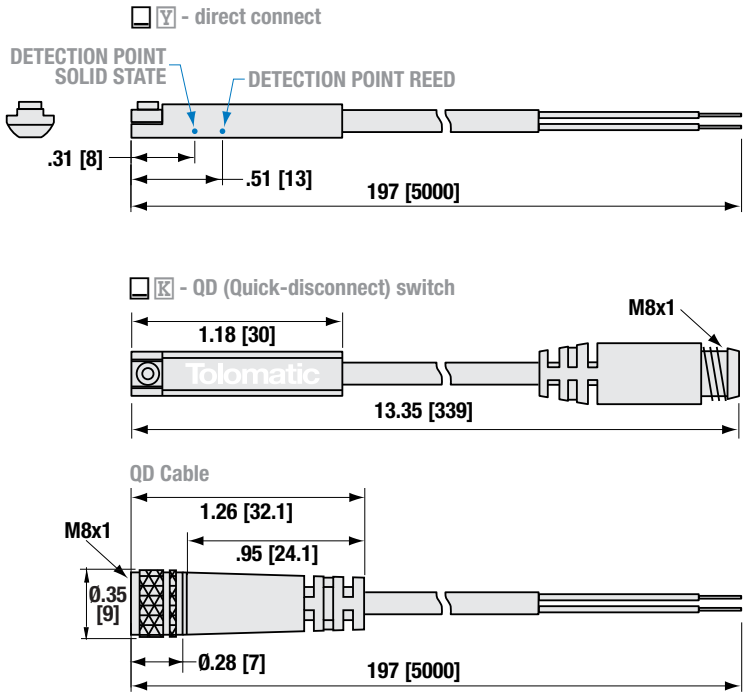

Dimensions in inches [brackets indicate dimensions in millimeters]

MOUNTING DIMENSIONS

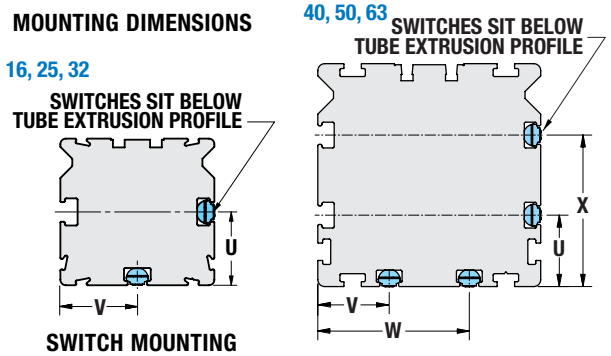

SWITCH MOUNTING

	MXE16	MXE25	MXE32	MXE40	MXE50	MXE63
U	7.9	20.0	27.0	20.5	27.4	38.0
V	15.0	21.0	27.7	20.5	27.4	38.0
W	–	–	–	43.5	51.4	62.0
X	–	–	–	43.5	51.4	62.0

Dimensions in millimeters

	MXE16	MXE25	MXE32	MXE40	MXE50	MXE63
U	0.31	0.79	1.06	0.81	1.08	1.50
V	0.59	0.83	1.09	0.81	1.08	1.50
W	–	–	–	1.71	2.02	2.44
X	–	–	–	1.71	2.02	2.44

Dimensions in inches

COMPILE APPLICATION REQUIREMENTS

APPLICATION DATA WORKSHEET

Fill in known data. Not all information is required for all applications

ORIENTATION

☐ Horizontal

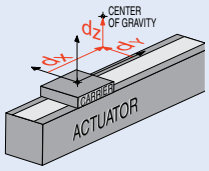

☐ Side

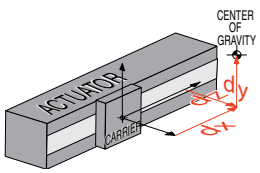

☐ Horizontal Down

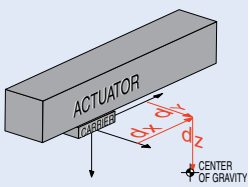

☐ Vertical

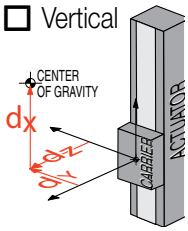

☐ Angled °

α _____

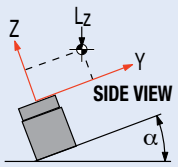

β _____

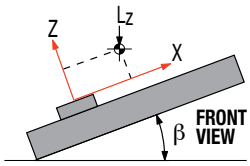

☐ Load attached to carrier OR ☐ Load supported by other mechanism

DISTANCE FROM CENTER OF CARRIER TO LOAD CENTER OF GRAVITY

d_x _____
d_y _____
d_z _____

☐ inch (U.S. Standard) ☐ millimeter (Metric)

STROKE LENGTH _____

☐ inch (SK) (U.S. Standard) ☐ millimeters (Metric)

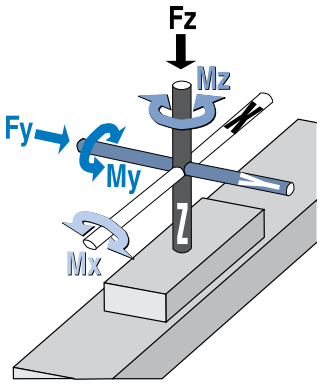

BENDING MOMENTS APPLIED TO CARRIER

M_x _____
M_y _____
M_z _____

☐ in.-lbs. (U.S. Standard) ☐ N-m (Metric)

PRECISION

Repeatability _____

☐ inch ☐ millimeters

⚠ NOTE: If load or force on carrier changes during cycle use the highest numbers for calculations

LOAD _____

☐ lb. (U.S. Standard) ☐ kg. (Metric)

THRUST REQUIRED

F_z _____
F_y _____

☐ lbf. (U.S. Standard) ☐ N (Metric)

OPERATING ENVIRONMENT

Temperature, Contamination, etc.

_____
_____
_____

☐

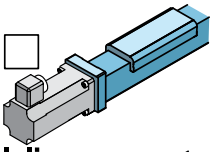

Inline

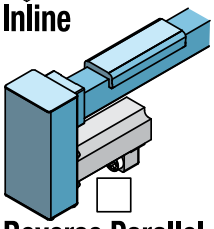

☐

Reverse Parallel

MOVE PROFILE

Move Distance _____

☐ inch ☐ millimeters

Dwell Time After Move_____

Max. Speed _____

☐ in/sec ☐ mm/sec

MOVE TIME _____

☐ sec

NO. OF CYCLES _____

☐ per minute ☐ per hour

MOTION PROFILE

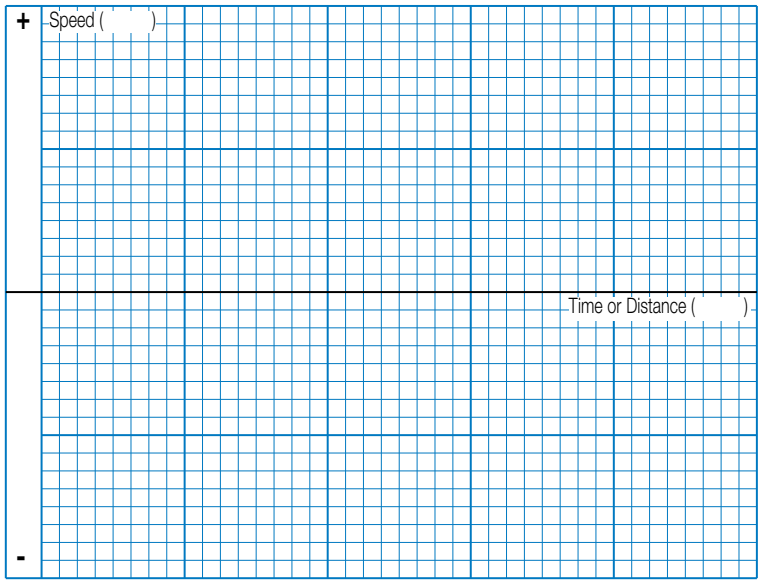

Graph your most demanding cycle, including accel/decel, velocity and dwell times. You may also want to indicate load variations and I/O changes during the cycle. Label axes with proper scale and units.

CONTACT INFORMATION

Name, Phone, Email Co. Name, Etc.

_____
_____
_____
_____
_____

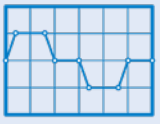

sizeit.tolomatic.com for fast, accurate actuator selection

USE THE TOLOMATIC SIZING AND SELECTION SOFTWARE AVAILABLE ON-LINE AT www.tolomatic.com OR... CALL TOLOMATIC AT 1-800-328-2174.

We will provide any assistance needed to determine the proper actuator for the job.

FAX 1-763-478-8080 **EMAIL help@tolomatic.com**

SELECTION GUIDELINES

The process of selecting a load bearing actuator for a given application can be complex. It is highly recommended that you contact Tolomatic or a Tolomatic Distributor for assistance in selecting the best actuator for your application. The following overview of the selection guidelines are for educational purposes only.

1 CHOOSE ACTUATOR BEARING STYLE & SIZE

Choose an actuator that has the thrust, speed and moment load capacity to move the load. Use the Speed/Stroke graph (page MXE_17) for the screw and the Moment and Load Capacity tables (pg. MXE_8-11) for the actuator.

2 COMPARE LOAD TO MAXIMUM LOAD CAPACITIES

Calculate the application load (combination of load mass and forces applied to the carrier) and application bending moments (sum of all moments Mx, My, and Mz applied to the carrier). Be sure to evaluate the magnitude of dynamic inertia moments. When a rigidly attached load mass is accelerated or decelerated, its inertia induces bending moments on the carrier. Careful attention to how the load is decelerated at the end of the stroke is required for extended actuator performance and application safety. If either load or any of your moments exceed figures indicated in the Moment and Load Capacity tables (pg. MXE_8-11) for the actuator consider:

1) Higher capacity bearing style i.e. [S] Solid to [P] Profiled Rail

2) A larger actuator size

3) Auxiliary carrier

4) External guide system

3 CALCULATE LOAD FACTOR LF

For loads with a center of gravity offset from the carrier account for both applied (static) and dynamic loads. The load factor (LF) must not exceed the value of 1.

$$L_F = \frac{Mx}{Mx_{max}} + \frac{My}{My_{max}} + \frac{Mz}{Mz_{max}} + \frac{Fy}{Fy_{max}} + \frac{Fz}{Fz_{max}} \leq 1$$

If LF does exceed the value of 1, consider the four choices listed in step #2.

4 ESTABLISH YOUR MOTION PROFILE AND CALCULATE ACCELERATION RATE

Using the application stroke length and maximum carrier velocity (or time to complete the linear motion), establish the motion profile. Select either triangular (accel-decel) or trapezoidal (accel-constant speed-decel) profile. Now calculate the maximum acceleration and deceleration rates of the move. Acceleration/deceleration should not exceed critical speed (page MXE_17) for the screw/nut combination chosen. Also, do not exceed safe rates of dynamic inertia moments determined in step #3.

SPEED FACTOR

FOR APPLICATIONS WITH HIGH SPEED OR SIGNIFICANT SHOCK AND VIBRATION: Calculated values of loads and bending moments must be increased by speed factor from the graph below to obtain full rated life of profiled rail bearing system.

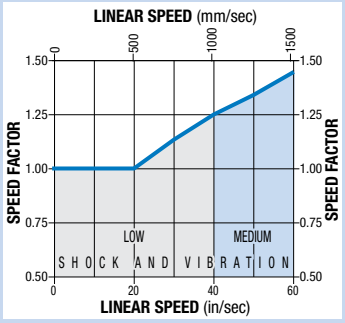

5 SELECT THE LEAD SCREW

Based on the application requirements for accuracy, backlash, quiet operation, life, etc. select the appropriate lead screw type (Acme screw with a solid nut or ball screw with a standard or anti-backlash nut) and the pitch (lead). For additional information on screw selection, consult *"Which Screw? Picking the Right Technology"* (#9900-4644) available at www.tolomatic.com.

6 SELECT MOTOR (GEARHEAD IF NECESSARY) AND DRIVE

To help select a motor and drive, use the sizing equations located in the Engineering Resources section of the Tolomatic Electric Products Catalog (#3600-4609) to calculate the application thrust and torque requirements. Refer to Motor sections to determine the motor and drive.

7 DETERMINE TUBE CLAMP/MOUNTING PLATE REQUIREMENTS

- Consult the Tube Clamp Requirements graph for the model selected (page MXE_16)
- Cross reference the application load and maximum distance between supports
- Select the appropriate number of tube clamps, and mounting plates if required for motor and adapter clearance.

8 CONSIDER OPTIONS

- Choose metric or inch (US standard) load mounting. (When ordering use [S][K] for inch and [S][M] for metric)
- Switches - Reed, Solid State PNP or NPN, all available normally open or normally closed
- [F][L] Floating mount bracket - used when lack of parallelism occurs between the actuator and an externally guided and supported load (available for [S] Solid bearing style MXE actuators)

[S] SOLID BEARING 2:1 RULE

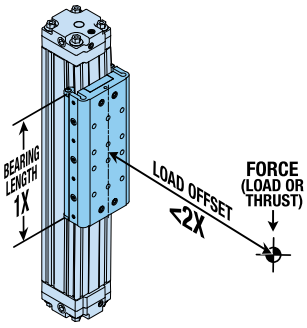

For applications using [S] solid bearings, binding or interrupted motion may occur if the load offset is equal to or greater than twice the bearing length (1X). *LOAD OFFSET is defined as: the distance from the applied force (or the load center of gravity) to the centerline of the carrier.*

If the load offset cannot be changed consider:

1.) Higher capacity bearing style, i.e. [S] to [P]

2.) Larger Bore Cylinder

3.) Auxiliary Carrier

4.) Add External Guides

ADJUSTMENT PROCEDURES

[S] SOLID BEARING CARRIER ADJUSTMENT

16 Series

NOTE: MXE16S requires a different carrier adjustment procedure, see below.

Tools Required:

Inch Models: 1/16 inch and 2.5mm Hex Wrench (Key)
Metric Models: 2 and 2.5 mm Hex Wrench (Key)

1. Loosen endplate screws on both ends of the carrier.
2. Fully loosen all tension and lock screws. They do not need to be removed, just fully loosened.

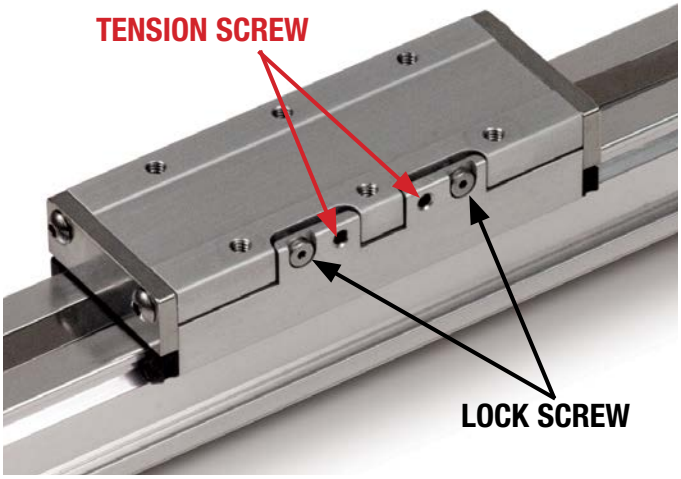

3. Tighten tension screws by turning them clockwise until the carrier is just tight enough so that no side-to-side rocking motion is present and it can easily be moved by hand over the entire stroke length with no hesitation. Very little torque on the screws is required to obtain this condition.

Note: The Tension Screws are the small set screw style fastener. The Lock Screws are the larger, low head, hex drive screws.

4. Tighten lock screws by turning them clockwise until tight. The carrier should feel snug in relation to the tube, with no side-to-side rocking motion present. If the carrier becomes too loose, loosen the lock screws, tighten the tension screws and then retighten the lock screws.
5. Once ideal carrier tension is achieved, fully tighten end plate screws on both ends of the carrier.

Allen wrench sizes for carrier adjustment, Solid bearing actuators

	Tension Screw		Lock Screw	
	mm	in	mm	in
16	2	1/16	2	1/16
25	4	5/32	3	1/8
32	4	5/32	2	3/32
40	4	5/32	3	1/8
50	4	3/16	2.5	3/32
63	5	1/4	5	3/16

Check out our MX--S carrier adjustment video on the web
https://youtu.be/LVWPg2gfy0A

25, 32, 40, 50, 63 Series

The [S] solid bearing carrier will provide for maximum life when properly adjusted. The carrier design contains both tension and lock screws. The tension screws control the amount of pressure placed on the carrier bearings. The lock screws lock the tension screws in place and provide fine adjustment of the carrier bearings. The number of tension and lock screws will vary depending on the bore size of the actuator.

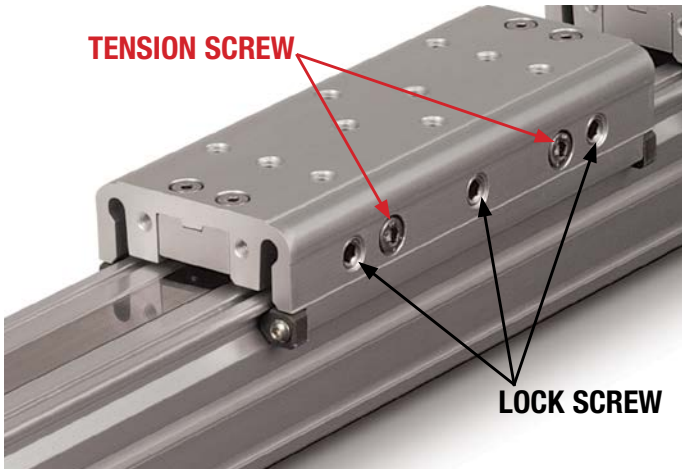

1. Fully loosen all tension and lock screws. They do not need to be removed, just fully loosened.
2. Tighten tension screws on both sides of carrier roughly 1/8 to 1/4 turn clockwise past where the screw starts to feel snug. The carrier should be very difficult or impossible to move by hand.
3. Next, adjust the lock screws on both sides of the carrier roughly 1/8 to 1/4 turn clockwise past where the screw starts to engage.
4. Ideal carrier tension is achieved when the carrier feels snug in relation to the tube. No rocking motion should be present. The carrier should be loose enough to be moved by hand over the entire length of the actuator. If after this process the carrier has become too loose, equally adjust all of the lock screws with a slight 1/32 turn counter-clockwise. A carrier that is adjusted too tight will increase the breakaway pressure required for motion; in extreme cases no motion will occur when air is applied.

During the application duty cycle, this process may need to be repeated. Keeping the carrier properly adjusted will prolong the life of the [S] solid bearing system.

sizeit.tolomatic.com for fast, accurate actuator selection

sizeit.tolomatic.com for fast, accurate actuator selection or call Tolomatic (1-800-328-2174) with application information. We will provide any assistance needed to determine the proper MXE screw-driven actuator.

tolomatic.com/ask Technical support before and after purchase

SERVICE PARTS ORDERING

REPAIR KITS

Repair kit includes: dust band, end caps, [Also for S style: bearings and bearing caps]

The part number for a repair kit begins with RK followed by model, actuator size, bearing type, and stroke length (SK = inch/US Standard, SM = metric) (NOTE: If unit has an auxiliary carrier also include DC and distance between carrier centers)



SWITCHES

TO ORDER SERVICE PARTS SWITCHES:

Switches for MXE include retained mounting hardware and female Quick-disconnect coupler (if applicable). Switches are the same for all actuator sizes and bearing styles

Code	Lead	Normally	Sensor Type
RY	5m (197 in)	Open	Reed
RK	Quick-disconnect		
NY	5m (197 in)	Closed	Reed
NK	Quick-disconnect		
TY	5m (197 in)	Open	Solid State PNP
TK	Quick-disconnect		
KY	5m (197 in)	Open	Solid State NPN
KK	Quick-disconnect		
PY	5m (197 in)	Closed	Solid State PNP
PK	Quick-disconnect		
HY	5m (197 in)	Closed	Solid State NPN
HK	Quick-disconnect		

To order switch kit use configuration code for switch preceded by SW and actuator code.

EXAMPLE: SWMXE25KK

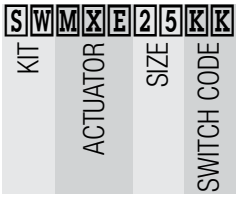

The example is for Solid State NPN, Normally Open Switch with Quick-disconnect couplers. Each switch kit is complete with Bracket, Set Screw, Switch and mating QD cable. Note that the bracket/switch size is common and may be used on any size MXE.

ORDERING

MODEL SELECTION (MUST BE IN THIS ORDER)

OPTIONS (IN ANY ORDER)

MXE 40 P SN02 SM2007.02 LMI DC215.9 TC8 TK2

MODEL

MXE MX Rodless Electric Actuator

SERIES

16 Series actuator
25 Series actuator
32 Series actuator
40 Series actuator
50 Series actuator
63 Series actuator

BEARING

S Solid Bearing
P Profiled Rail

NUT/SCREW CONFIGURATION

SOLID NUT / PITCH (turn/in)	SERIES
SN01	MXE 25, 32, 40
SN02	MXE 16, 25, 32, 40
SN05	MXE 25, 32
SN04	MXE 16
SN16	MXE 16

BALL NUT / PITCH (turn/in)	SERIES
BN01	MXE 63
BNL01	MXE 63
BN02	MXE 40, 50, 63
BNL02	MXE 40, 50, 63
BN04	MXE 63
BNL04	MXE 63
BN05	MXE 40, 50
BNL05	MXE 40, 50
BN08	MXE 25, 32
BNL08	MXE 25, 32
BNM10	MXE 25, 32

STROKE LENGTH & MOUNTING TYPE

SK_ _ _ _._ _ Stroke, enter desired stroke length in **inches**

SM†_ _ _ _._ _ Stroke, enter desired stroke length in **millimeters**

NOTE: Actuator mounting threads and mounting fasteners will be either inch or metric; depending on how stroke length is indicated

SK=inch mounting

SM= metric mounting

† The metric version provides metric tapped holes for mounting of the load to the carrier and of the actuator to mounting surfaces

MOTOR MOUNTING / REDUCTION

(must choose one)

LMI In-Line mounting
LME23 Ext. shaft for RP & 23 frame motor
LME34 Ext. shaft for RP & 34 frame motor

⚠ *A motor size and code must be selected when specifying a reverse-parallel mounting configuration.*

RPL1 1:1 Reverse-Parallel mount left
RPR1 1:1 Reverse-Parallel mount right
RPB1 1:1 Reverse-Parallel mount bottom
RPT1 1:1 Reverse-Parallel mount top
RPL2 2:1 Reverse-Parallel mount left
RPR2 2:1 Reverse-Parallel mount right
RPB2 2:1 Reverse-Parallel mount bottom
RPT2 2:1 Reverse-Parallel mount top

MOTOR / DRIVE / CONTROLLER / PLANETARY GEARBOX

⚠ **Visit www.tolomatic.com for the most up-to-date information or call Tolomatic 1-800-328-2174**

CARRIER OPTIONS

DC_ _ _._ _ _ Auxiliary Carrier, enter center-to-center spacing desired in **inches** (SK) or **millimeters** (SM)

(Same unit of measure as stroke length is required)

⚠ Center-to-center spacing between carriers adds to overall length of the actuator, this distance will not be subtracted from stroke length specified in the previous step

BIR Bracket in Reverse (see page 7 & 30)
(Carrier) (Mirrored)

SWITCHES

RY_ Reed Switch (Normally Open) with 5-meter lead, & enter quantity desired
RK_ Reed Switch (Normally Open) with 5-meter lead/QD, & quantity
NY_ Reed Switch (Normally Closed) with 5-meter lead, & quantity
NK_ Reed Switch (Normally Closed) with 5-meter lead/QD, & quantity

TY_ Solid State Switch PNP (Normally Open) with 5-meter lead, & quantity
TK_ Solid State Switch PNP (Normally Open) with 5-meter lead/QD, & quantity
KY_ Solid State Switch NPN (Normally Open) with 5-meter lead, & quantity
KK_ Solid State Switch NPN (Normally Open) with 5-meter lead/QD, & quantity

PY_ Solid State Switch PNP (Normally Closed) with 5-meter lead, & quantity
PK_ Solid State Switch PNP (Normally Closed) with 5-meter lead/QD, & quantity
HY_ Solid State Switch NPN (Normally Closed) with 5-meter lead, & quantity
HK_ Solid State Switch NPN (Normally Closed) with 5-meter lead/QD, & quantity

FOOD GRADE LUBRICATION

LUB_Grease, Food/Drug

MOUNTING

TC_ Tube Clamps, enter number of pairs
FL Floating Mount
MP_ Mounting Plates, & quantity

NOTE: Floating Mount is not available with "P" Profiled Rail

NOTE: Brakes mounted on reverse parallel motor mounts (especially in vertically positioned actuators) will not prevent back driving of the screw and the load falling under gravity in the event of a timing belt failure. An inline motor mount with a fail-safe brake mounted directly to the actuator shaft or a special geared or thru-shaft reverse parallel construction should be considered if a brake is required in a safety critical application. Contact Tolomatic for alternate reverse parallel brake mounting options.

Gearheads may be used with reverse parallel motor mounts. However, the torque on the belt and internal RP components must remain below the capabilities of the assembly to prevent belt slipping or premature failure. Contact Tolomatic for additional information if required.

⚠ **Not all codes listed are compatible with all options.**

VISIT www.tolomatic.com FOR COMPLETE, UP-TO-DATE INFORMATION

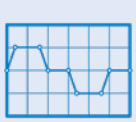

sizeit.tolomatic.com for fast, accurate actuator selection

⚠ **sizeit.tolomatic.com for fast, accurate actuator selection** or call Tolomatic (1-800-328-2174) with application information. We will provide any assistance needed to determine the proper MXE screw-driven actuator.



tolomatic.com/ask Technical support before and after purchase

Tolomatic™

Linear Motion Solutions

ELECTRIC LINEAR ACTUATORS

Rod -Screw-Drive
Rodless Belt-Drive



SERVO LINEAR ACTUATORS

Rod-Style Integrated Motor
ServoWeld



PNEUMATIC LINEAR ACTUATORS

Rodless Band Cylinders
Cable Cylinders



POWER TRANSMISSION

Right Angle Gearboxes
Industrial Caliper Disc Brakes

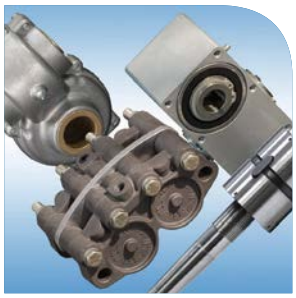

USA – Headquarters

Tolomatic, Inc.
Hamel MN 55340 USA

763-478-8000
1-800-328-2174
sales@tolomatic.com

tolomatic.com

MÉXICO

Service Center
Querétaro, Mexico
El Marqués, México

+1 (763) 478-8000
help@tolomatic.com

EUROPE

Tolomatic Europe GmbH
Rüsselsheim, Germany

+49 6142 17604-0
help@tolomatic.eu

tolomatic.com/de

CHINA

Tolomatic Automation Products (Suzhou) Co. Ltd.
Suzhou, Jiangsu, China

+86 512 6750 8506
TolomaticChina@tolomatic.com

tolomatic.cn

Learn More About Tolomatic

©2026. All brand and product names are trademarks of their respective owners. Information in this document is believed accurate at time of printing. However, Tolomatic assumes no responsibility for its use or for any errors that may appear in this document. Tolomatic reserves the right to change the design or operation of the equipment described herein and any associated motion products without notice. Information in this document is subject to change without notice.

Visit www.tolomatic.com for the most up-to-date technical information.