Tolomatic™
EXCELLENCE IN MOTION

Parts Sheet

8100-4102_09

MXP40N Internal Bearing 38mm (1-1/2 inch) Bore

Models: MXP40NTP MXP40NGP MXP40NNP
MXP40NST MXP40NSG MXP40NSN
Both Metric and Inch models

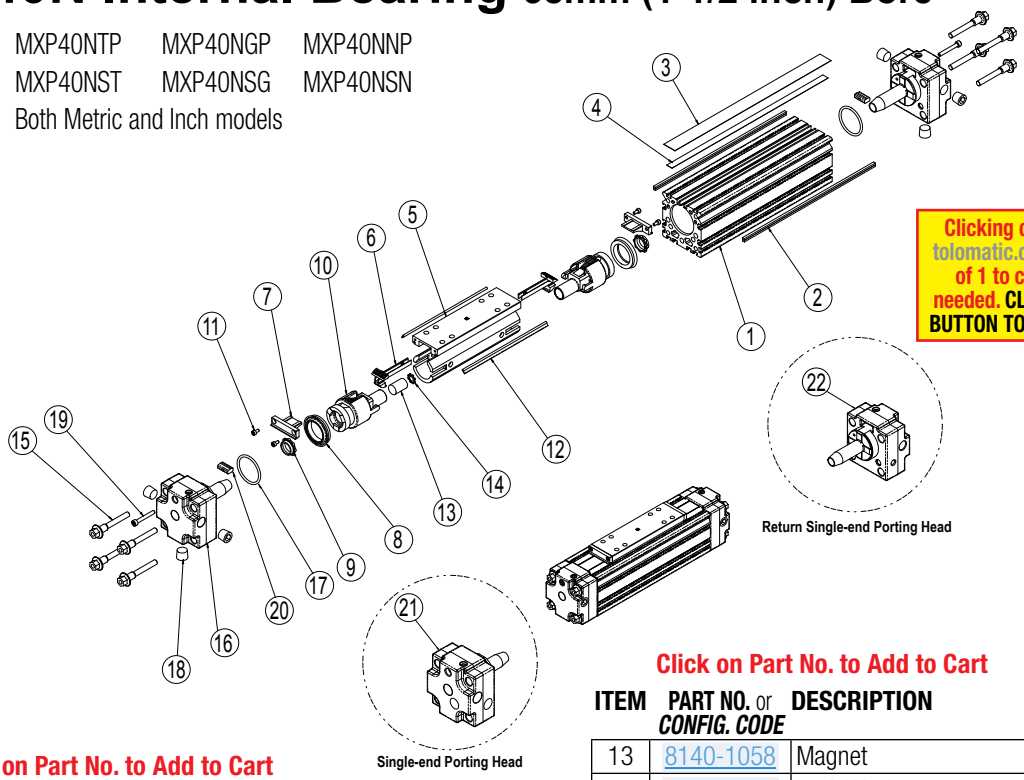

Clicking on part number will open tolomatic.com/cart and add quantity of 1 to cart. Change quantity as needed. CLICK ON BROWSER'S BACK BUTTON TO RETURN TO PARTS SHEET.

Click on Part No. to Add to Cart

ITEM	PART NO. or CONFIG. CODE	DESCRIPTION	QTY
1[1]	RTBMXP40N	Replacement Tube (8140–1010) Specify Stroke	A/R
2[2]	NMBMXP40N	Replacement Magnet Band (8140–1019) Specify Stroke	4 A/R
3[3,5]	NDBMXP40N	Replacement Dust Band (8140–1018) Specify Stroke	A/R
4[4,5]	NSBMXP40N	Replacement Seal Band (8140–1017) Specify Stroke	A/R
5	8140-1012	Piston Bracket (metric)	1
	8140-1512	Piston Bracket (inch)	
6[5]	8140-1007	Band Ramp	2
7[5]	8140-1006	End Cap	2
8[5]	0915-1042	U-Cup	2
9[5]	0915-1184	Cushion Seal	2
10	8140-1005	Piston	2
11	0601-1038	Socket Head Cap Screw	4
12[5]	8140-1059	Wiper	2

Click on Part No. to Add to Cart

ITEM	PART NO. or CONFIG. CODE	DESCRIPTION	QTY
13	8140-1058	Magnet	1
14	8140-1072	Lock Washer	1
15	4512-1011	Head Screw (metric)	8
	0512-1011	Head Screw (inch)	
16	8140-9001	Head Assy, NPT	2
	8140-9006	Head Assy, BSPT Metric Taper	
	8140-9007	Head Assy, ISO Metric Parallel	
17[6]	0915-1178	O-Ring	2
18[6]	1004-1073	Pipe Fitting Plug, 1/4 NPT	6
	4915-1002	Pipe Fitting Plug, 1/4-19	
	5915-1006	Pipe Fitting Plug, G 1/4	
19[6]	8140-1074	Socket Head Cap Screw	2
20[6]	8132-1039	Band Clamp	2
21[7]	8140-9002	Head Assy, NPT Single-end Porting	1
	8140-9008	Head Assy, BSPT Metric Taper, Single-end Porting	
	8140-9009	Head Assy, ISO.0 Metric Parallel, Single-end Porting	
22[7]	8140-9003	Head Assy, Return Single-end Porting	1

Ordering method:

Tube

[1] Replacement Tube RTB MXP40 N SK/SM or _ _ _ _ _ DW_

EXAMPLE: RTB MXP40 N SK21.25 DW7

[2] Replacement Magnet Band
For long stroke lengths the magnet band is shipped in multiple pieces NMB MXP40 N SK/SM or _ _ _ _ _ DW_

EXAMPLE: NMB MXP40 N SK21.25 DW7

Magnet Band — Model & Size — Bearing — Stroke Length — Aux. Carrier

Ordering method:

Dust Band

[3] Replacement Dust Band NDB MXP40 N SK/SM or _ _ _ _ _ DW_

EXAMPLE: NDB MXP40 N SK21.25 DW7

[4] Replacement Seal Band NSB MXP40 N SK/SM or _ _ _ _ _ DW_

EXAMPLE: NSB MXP40 N SK21.25 DW7

Seal band — Model & Size — Bearing — Stroke Length — Aux. Carrier

Auxiliary Carrier Option Note: *If replacing a Tube (1.), Magnet Band (2.), Dust Band (3.), or Seal Band (4.) on an actuator that has an Auxiliary Carrier, be sure to add "DW _ _ _" to the end of the configuration string when ordering. "DW" indicates the need for additional length and "_ _ _" indicates the measurement of space between carriers (in inches [SK] or millimeters [SM] as indicated earlier in the configuration string).*

[5] Parts included in Repair Kits RKMXP40NSK (inch) & RKMXP40NSM (metric).

[6] Parts included in Head Assemblies (16).

[7] Part exclusive to single-end porting option.

CYLINDER DISASSEMBLY INSTRUCTIONS

Begin with a clean work area. Make sure all replacement parts are available and have no visual damage or defects. The following tools are recommended for proper disassembly and assembly. (Exact wrench sizes and materials will vary depending on cylinder size.)

- Allen wrench set (std. and metric)
- Small Straight edge screwdriver
- Socket wrench & socket set
- Needle nose pliers
- RheoGel TEK664 grease
- Tin snips

For best actuator performance it is recommended that the following instructions be read and followed carefully.

1. REMOVE BAND CYLINDER FROM MACHINERY

Remove all mounting hardware and air connections, if present, from the Cylinder Heads (16) and/or Piston Bracket (5).

2. LOOSEN BANDS

Loosen Screw (19) from Cylinder Head (16) approx. 4 to 5 turns, but do not remove the Screw. Tap the Screw into the Head to disengage the Band Clamp (20). Repeat the process for the other Head.

3. REMOVE HEADS

Remove the four Head Screws (15) to free each Cylinder Head (16). Remove each head by rocking it up and down until the Head is free from the Cylinder Tube. **DO NOT TWIST!** Remove the O-Ring (17) from both Heads with a small screwdriver.

4. REMOVE DUST BAND

Remove End Caps (7) from both ends of the Piston Bracket (5) by removing Screws (11). To remove the Dust Band (3), lift one end and pull the Band through the Piston Bracket. The Band is magnetically retained so some resistance will be present when removing.

5. REMOVE SEAL BAND

CAUTION: *Sealing Band edges are sharp. Grasp the top and bottom of the Band when removing, not the edges.*

Slide Piston Bracket (5) out of the Tube, then remove the Sealing Band (4). Keep the Sealing Band available to assist in the reassembly of the new Sealing Band. A 6-inch piece of Band is also included in the repair kit for use during reassembly.

6. DISASSEMBLE PISTON BRACKET

Remove Wipers (12) from the Piston Bracket (5). With a small straight edge screwdriver, remove the U-Cups (8) from both Pistons (10). Remove the Cushion Seals (9) from the Piston. Remove the Pistons (10) by inserting the screwdriver under the Piston side tabs until the side retaining tabs are disengaged from the Piston Bracket (5). With a small screwdriver, remove the Band Ramps (6) by disengaging the side retaining tabs from the Piston Bracket. Keep the Piston Bracket and Pistons separated for reassembly.

CYLINDER ASSEMBLY INSTRUCTIONS

1. CLEAN AND LUBRICATE

Thoroughly clean all components, particularly the Tube Bore, Tube Slot and Bands. Thoroughly lubricate the bore of the Tube with a thin, uniform layer of RheoGel TEK664 grease.

2. ASSEMBLY OF PISTON BRACKET

With the Piston Bracket (5) in hand, install the Band Ramps (6) so the smaller ends are on the bottom. Install the Pistons (10) with the ramp facing up. Slide the Piston onto the Piston Bracket. It should snap easily into place. Install new lubricated U-Cups (8) (seal lips facing out), and Cushion Seals (9) (small end facing out). Slide new Wipers (12) into the groove on the Piston Bracket (5) until flush with Piston Bracket edge and flare Wiper edges outward.

3. INSTALL INNER SEALING BAND

CAUTION: *Metal edges of Sealing Band are sharp. Exercise caution to avoid injury to yourself while installing. Handle Sealing Band with care. Do not damage edges while handling.*

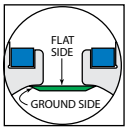

Insert Sealing Band (4) into Cylinder Tube (1) by laying the Band out along the length of the actuator and passing it sideways through slot in Tube. With flat side facing up (ground side facing down), position the Band so a Piston Bracket's length of Band extends from the Tube at one end.

4. INSTALL PISTON ASSEMBLY

Place generous amounts of grease around bore of Tube (1) on both ends and fill indentations on both sides of Piston Bracket (5) with grease. Using 6-inch length of Seal Band included with repair kit, or a short length of the old Seal Band, slightly kink the Band upwards, one inch (25mm) from the end. Insert into slot between the Band Ramp (6) and Piston (10) on the Piston Bracket, and stop against opposite side of the Piston. Feed the extended Sealing Band through the opposite end of the Piston Bracket (5) and up the short length of inserted Band. Once the Sealing Band is through the Piston Bracket, remove the short length of Band material and discard.

Grasp the Piston Bracket while holding the Wipers in place with your fingers. Flare the Wiper edges out while inserting the Piston Bracket partway into the Tube. Do not force the Piston Bracket. Place a finger over the opposite end of the Piston Bracket to keep the Wipers in place, while pushing the remainder of Piston Bracket into the Tube. If the Piston Assembly experiences resistance, use a small screwdriver to press in on the ends of the Band Ramps where it contacts the Tube (1). With the Piston Bracket in place, slide the length of the greased Tube until the end of the Piston just extends out the Tube. Wipe off the excess grease from the Piston end.

NOTE: If Tube and Piston Assembly were greased properly, excess grease should be present as the Piston exits end of Tube. If this is not the case, more grease will need to be added.

5. INSTALL ONE HEAD

CAUTION: *Twisting the Head during installation may cut the O-Rings resulting in excessive leakage during operation.*

Install new lubricated O-Rings (17) onto each Head (16). Position the Sealing Band (4) leaving .684" (17.4 mm) of Band protruding from the end of the Tube. Install Head into Tube holding Screw (19) in place. Position the Sealing Band on the bottom side of the Band Clamp (20). Use a slight up and down rocking motion (not side-to-side or twisting) to insert the first Head into Tube. The Head should be flush with the end of the Tube after installation.

Apply RheoGel TEK664 to threads of Head Screw (15) and install into Head. Torque Screws to 70 – 80 in-lbs (8 - 9 N-m).

6. INSTALL DUST BAND

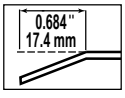

Slide Dust Band (3) through the upper slot of Piston Bracket (5) and lay on top of the Cylinder Tube slot. Bend the Dust Band downward at a slight angle (see illustration), .684 (17.4mm) from the end of the Band. Position the Dust Band on top of the Band Clamp (20). Hold Screw (19) in while inserting the Dust Band into the first Head (16). Tighten Screw (19). When completed pull the other end of the Dust Band to make sure it is secured. Repeat the process if necessary. Install End Caps (7) with Screws (11) onto Piston Bracket.

7. INSTALL OTHER HEAD

Position the Dust Band (3) so the end of the Sealing Band (4) is visible. With a tin snips, trim the Sealing Band (4) leaving .684" (17.4 mm) of Band protruding from the end of the Tube. Reposition the Dust Band and trim to the same length. Repeat step 5 to install the other Head (16). Bend the Dust Band (3) downward at a slight angle, .684 (17.4mm) from the end of the Band. Position the Dust Band on top of the Band Clamp (20). Hold Screw (19) in while inserting the Dust Band into the first Head (16). Tighten Screw (19).

8. CHECK ASSEMBLY

Manually push the Piston Bracket (5) back and forth along the full stroke to make certain that the cylinder is properly assembled before reconnecting to the pneumatic supply. The Piston Bracket should move consistently with minimal friction along the stroke.

9. REMOUNT THE CYLINDER ONTO THE MACHINE

⚠ Be certain any flow controls are in place and adjusted prior to applying compressed air to the cylinder.

Options - List of Parts

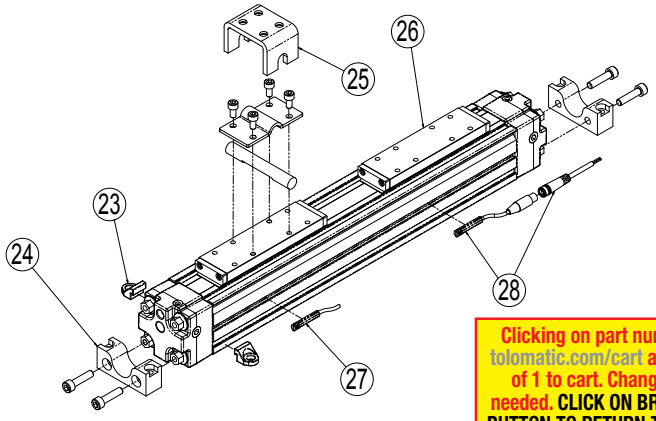

Clicking on part number will open tolomatic.com/cart and add quantity of 1 to cart. Change quantity as needed. CLICK ON BROWSER'S BACK BUTTON TO RETURN TO PARTS SHEET.

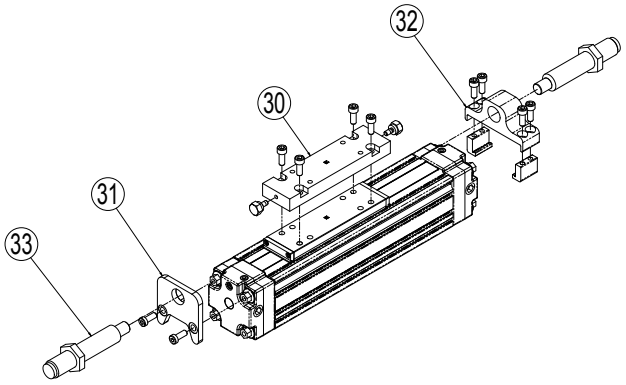

Click on Part No. to Add to Cart

Click on Part No. to Add to Cart

ITEM	PART NO. or CONFIG. CODE	DESCRIPTION
		MOUNTING KITS
23[1]	8140-9018	Tube Clamp Mounting Kit
	8140-1050	Tube Clamp
24[2]	8140-9019	Foot Mount Kit (metric)
	8140-9519	Foot Mount Kit (inch)
	8140-1055	Foot Mount
	2225-1044	Screw (metric)
	1310-1015	Screw (inch)
25[3]	8140-9035	Floating Mount Kit (metric)
	8140-9535	Floating Mount Kit (inch)
	8140-1066	Floating Mount Bracket
	8140-1067	Floating Mount Lower Bracket Strap
	0604-1027	Screw (metric)
	0610-1045	Screw (inch)
	8140-1064	Floating Mount Pin
		DUAL CARRIER
26	8140-9028	**Dual Carrier Piston Bracket Assy (metric)**
	8140-9528	**Dual Carrier Piston Bracket Assy (inch)**
		SWITCHES
27		Switches without Quick-Disconnect Couplers
	SWMXP40NRY	Reed Switch, SPST Normally Open
	SWMXP40NNY	Reed Switch, SPST Normally Closed
	SWMXP40NTY	Solid State Switch, PNP (sourcing) Normally Open
	SWMXP40NKY	Solid State Switch, NPN (sinking) Normally Open
	SWMXP40NPY	Solid State Switch, PNP (sourcing) Normally Closed
	SWMXP40NHY	Solid State Switch, NPN (sinking) Normally Closed
28		Switches with Quick-Disconnect Couplers
	SWMXP40NRK	Reed Switch, SPST Normally Open
	SWMXP40NNK	Reed Switch, SPST Normally Closed
	SWMXP40NTK	Solid State Switch, PNP (sourcing) Normally Open

ITEM	PART NO. or CONFIG. CODE	DESCRIPTION
28 (cont.)	SWMXP40NKK	Solid State Switch, NPN (sinking) Normally Open
	SWMXP40NPK	Solid State Switch, PNP (sourcing) Normally Closed
	SWMXP40NHK	Solid State Switch, NPN (sinking) Normally Closed
		SHOCK ABSORBERS
30[4]	8140-9021	Shock Mounting Plate Kit (metric)
	8140-9521	Shock Mounting Plate Kit (inch)
	8140-1062	Shock Mounting Plate (metric)
	8140-1562	Shock Mounting Plate (inch)
	0604-1057	Screw (metric)
	3415-1077	Screw (inch)
	4912-1063	Impact Bolt
31[5]	8140-9020	**Fixed Shock Mounting Kit (metric)**
	8140-9520	**Fixed Shock Mounting Kit (inch)**
	8140-1060	Fixed Shock Bracket
	8132-1061	Screw (metric)
	3415-1077	Screw (inch)
32[6]	8140-9023	**Adjustable Shock Mounting Kit**
	8140-1080	Upper Shock Bracket
	8140-1082	Lower Shock Bracket Clamp
	0604-1057	Screw
33	4912-1067	**Lite Duty Shock Absorber**
	4912-1068	**Heavy Duty Shock Absorber**

1 Tube Clamp Kit contains 2 tube clamps.
2 Foot Mount Kit contains 1 foot mount and 2 fasteners.
3 Floating Mount Kit contains 1 floating mount, 1 lower strap, 1 pin and 4 fasteners.
4 Shock Mounting Plate Kit contains 1 mounting plate and 4 fasteners.
5 Fixed Shock Mounting Kit contains 1 shock bracket and 2 fasteners.
6 Adjustable Shock Mounting Kit contains 1 shock bracket, 2 bracket clamps and 4 fasteners.

LUBRICATION AND MAINTENANCE

All Tolomatic MX Band Cylinders are prelubricated at the factory. To ensure maximum cylinder life, the following guidelines should be followed.

1. Filtration

We recommend the use of dry, filtered air in our products. "Filtered air" means a level of 10 Micron or less. "Dry" means air should be free of appreciable amounts of moisture. Regular maintenance of installed filters will generally keep excess moisture in check.

2 External Lubricators (optional)

The factory prelubrication of Tolomatic Band Cylinders will provide optimal performance without the use of external lubrication. However, external lubricators can further extend service life of pneumatic actuators if the supply is kept constant.

Oil lubricators, (mist or drop) should supply a minimum of 1 drop per 20 standard cubic feet per minute to the cylinder. As a rule of thumb, double that rate if water in the system is suspected. Demanding conditions may require more lubricant.

If lubricators are used, we recommend a non-detergent, 20cP @ 140˚F 10-weight lubricant. Optimum conditions for standard cylinder operation is +32˚ to +150˚F (+0˚ to 65.5˚C).

NOTE: Use of external lubricators may wash away the factory installed lubrication. External lubricants must be maintained in a constant supply or the results will be a dry actuator prone to premature wear.

3. Sanitary Environments

Oil mist lubricators must dispense "Food Grade" lubricants to the air supply. Use fluids with ORAL LD50 toxicity ratings of 35 or higher such as Multitherm® PG-1 or equivalent. Demanding conditions can require a review of the application.

4. Cushion Adjustment

Adjust the Cushion Needles in the Cylinder Heads carefully to obtain optimum deceleration for your particular application. If there are questions on proper adjustment, please consult Tolomatic.

SWITCH WIRING DIAGRAMS AND LABEL COLOR CODING (CE and RoHS Compliant)

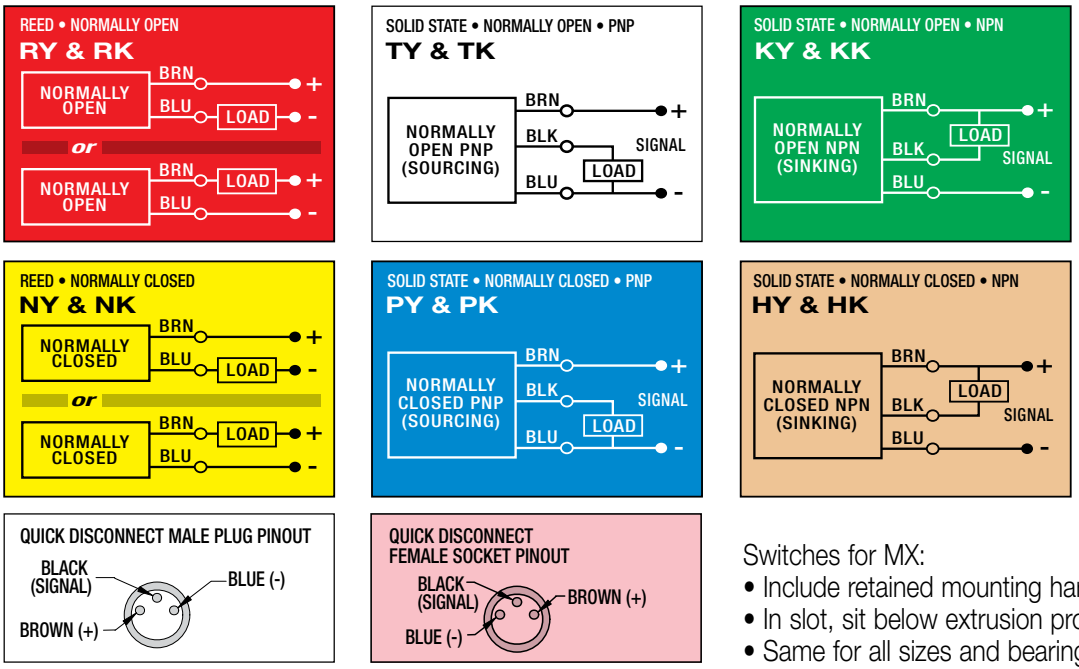

Switches for MX:
- Include retained mounting hardware
- In slot, sit below extrusion profile
- Same for all sizes and bearing styles

SWITCH INSTALLATION AND REPLACEMENT

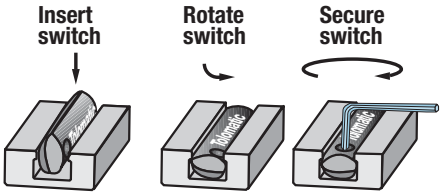

Place switch in side groove on tube at desired location with "Tolomatic" facing outward. While applying light pressure to the switch, rotate it such that the switch is halfway in the groove. Maintaining light pressure, rotate the switch in the opposite direction until the switch is fully inside the groove with "Tolomatic" visible. Re-position the switch to the exact location and lock the switch securely into place by tightening the screw on the switch.

SWITCH DETECTION POINT

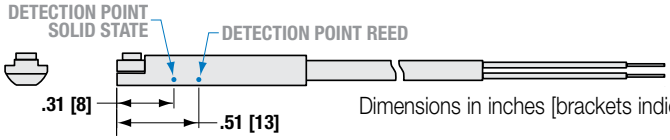

Dimensions in inches [brackets indicate dimensions in millimeters]

Tolomatic™
EXCELLENCE IN MOTION
3800 County Road 116, Hamel, MN 55340 USA
https://www.Tolomatic.com • Email: Help@Tolomatic.com
Phone: (763) 478-8000 • Toll Free: 1-800-328-2174

COMPANY WITH QUALITY SYSTEM CERTIFIED BY DNV = ISO 9001 =

All brand and product names are trademarks or registered trademarks of their respective owners. Information in this document is believed accurate at time of publication. However, Tolomatic assumes no responsibility for its use or for any errors that may appear in this document. Tolomatic reserves the right to change the design or operation of the equipment described herein and any associated motion products without notice. Information in this document is subject to change without notice.

© 2026 Tolomatic 202611031554