Tolomatic™

RSX
Extreme Force Actuator



The Trusted Partner
When Motion Matters

RSX Electric Rod-Style Actuator

The RSX is a high capacity industrial actuator that is an ideal choice for replacing hydraulic cylinders. Designed for 100% duty cycle, rugged service and long life it is available for forces up to 100,000 lbf (445 kN). Choose either ball screws or planetary roller screws for long lasting consistent performance. Tolomatic's Your Motor Here program allows the RSX to easily mount most servo motor and gearboxes on the market.

RSX Force Comparison

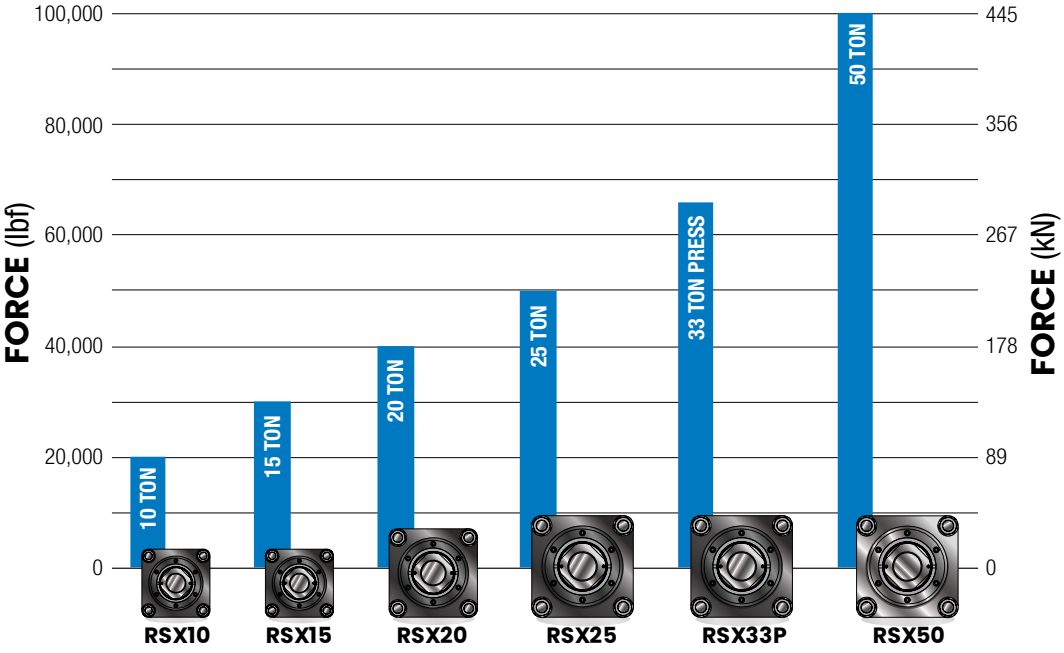

Your Motor Here

Specify the motor to be installed and actuator ships with proper mounting hardware

Superior Construction

Aluminum parts are Type III hardcoat black anodized for high surface hardness

Thrust Tube

Salt bath nitride treatment provides excellent corrosion resistance, surface hardness and is very resistant to adherence of potential contaminants

Field Replaceable Cartridge

Durable seal design prevents contaminants from entering the housing for extended life of the actuator

Additional rod scraper available with IP67 option for high contaminate environments

Powerful. Precise. Efficient.

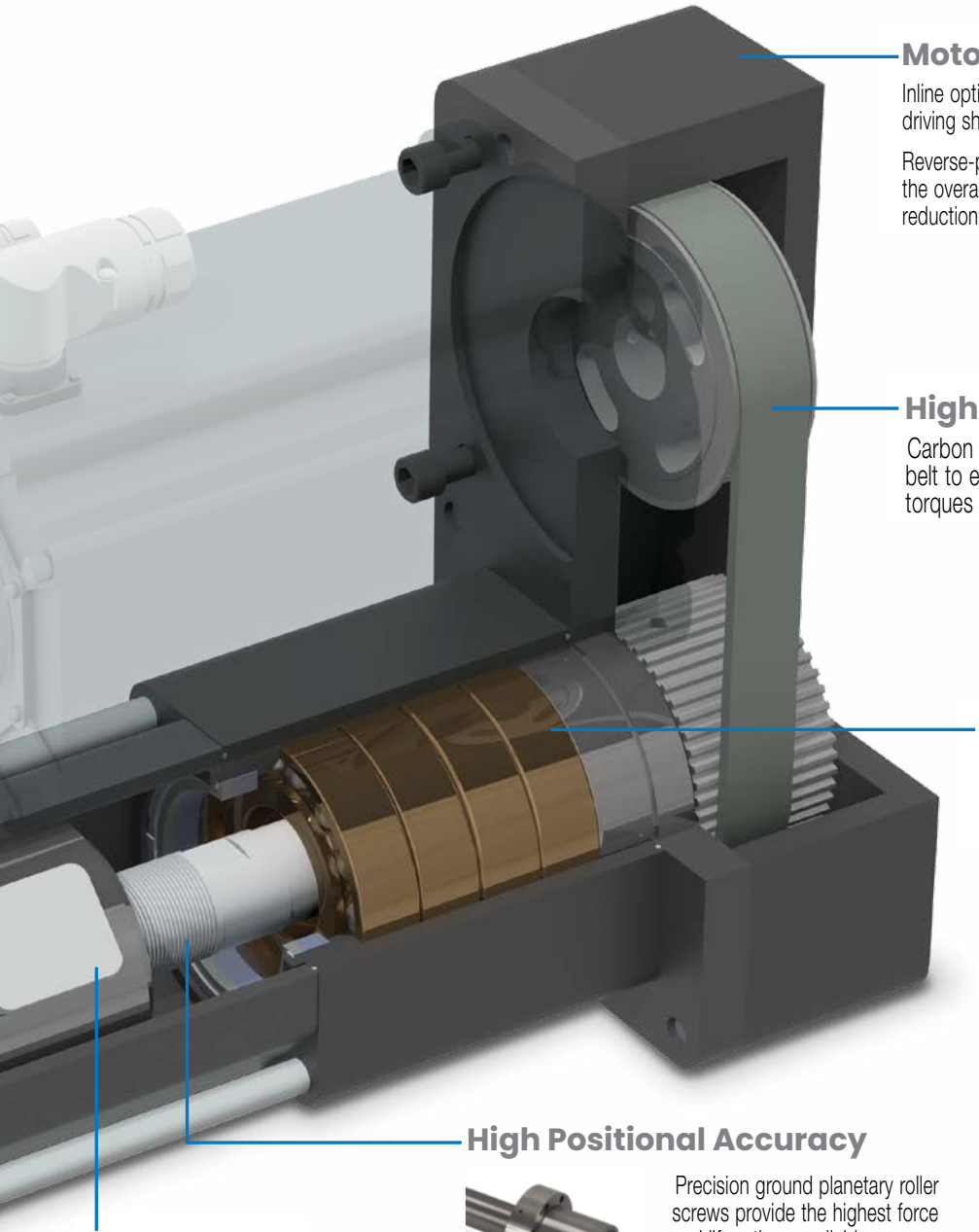

Motor Orientation

Inline option directly couples the driving shaft

Reverse-parallel option minimizes the overall length and offers a belt reduction drive with a 1:1 or 2:1 ratio

High Power Timing Belt

Carbon fiber tensile reinforced synchronous belt to ensure smooth transmission of high torques in a compact design.

High Force Angular Contact Bearings

Four ball bearings to support high axial loads & forces for long life

Internal Anti-Rotate

Composite bearings prevent rotation of the thrust tube

High Positional Accuracy



Precision ground planetary roller screws provide the highest force and life ratings available

SCREW ACCURACY		
Roller Screw	± 0.0004"/ft.	*± 0.0102mm/300mm*
Ball Screw	± 0.004"/ft.	*± 0.102mm/300mm*



Ball screw option also available

Mounting Options

Front Flange
Extended Tie Rods
Trunnion
Mounting Plates

Rod End Options

Rod Clevis
Threaded Rod (standard)
Extended Rod

Sensor Options

Solid state NPN, PNP or Reed
Tie Rod Clip

Environmental Protection

IP65 standard
IP67 Option

Oil Cooled

For extended high duty cycle/high force performance (see pg. 5)

RSX50 Next Generation Design

The RSX50 is the latest and largest design in the RSX high force actuator series. This new size is designed using Tolomatic's vast experience in the high force market to be as compact and efficient as possible, without sacrificing life or durability. The RSX50 supports up to 6 million pressing moves at 50 tons of force, leading the market in actuator life.

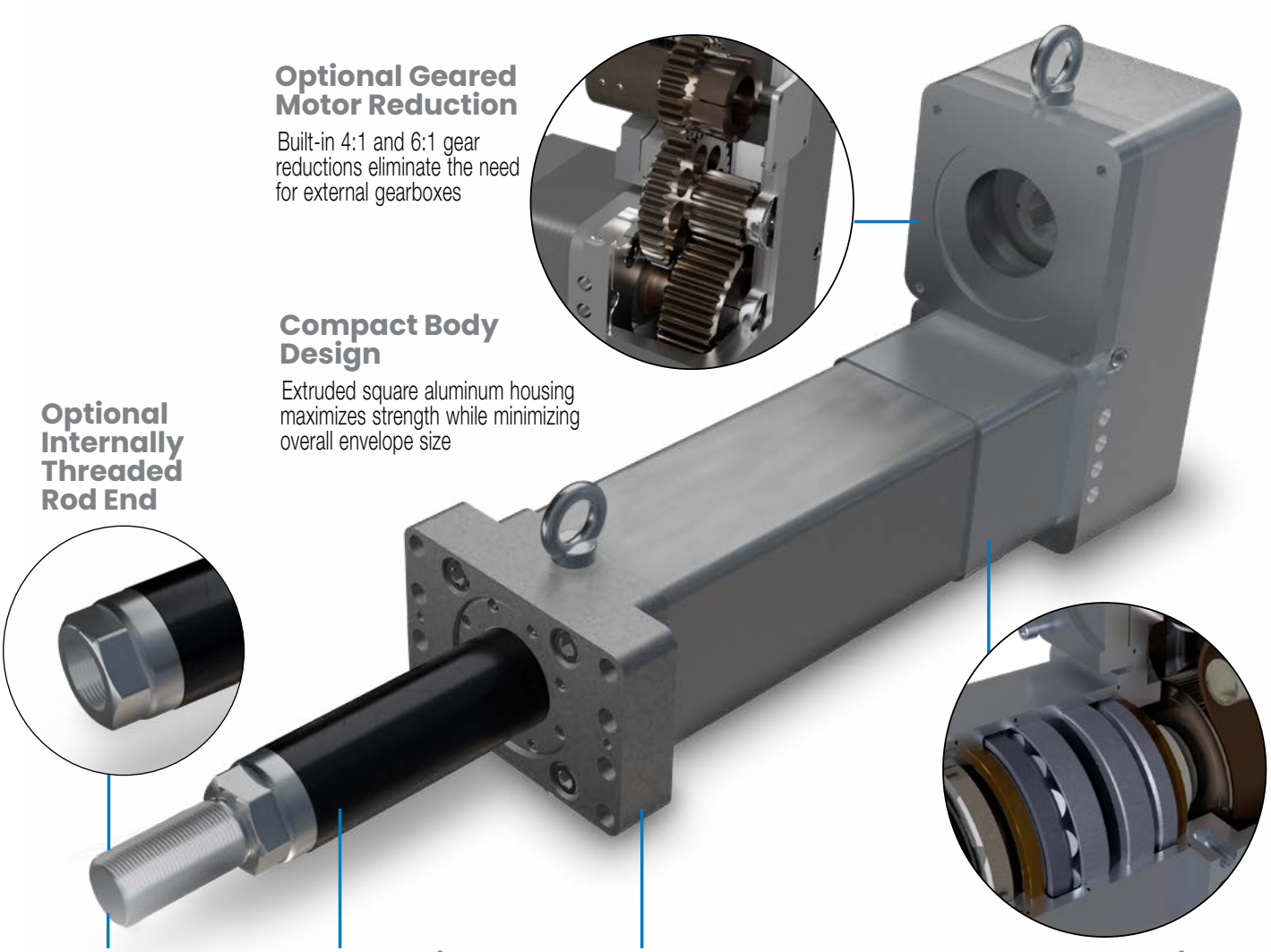

Optional Geared Motor Reduction

Built-in 4:1 and 6:1 gear reductions eliminate the need for external gearboxes

Compact Body Design

Extruded square aluminum housing maximizes strength while minimizing overall envelope size

Optional Internally Threaded Rod End

Standard Externally Threaded Rod End

Stroke Choice

Standardize stroke lengths of 180 mm, 330 mm, & 630 mm (7.1 in, 13.0 in, & 24.8 in)

Integrated Front Flange Option

Space-saving front-face mount reduces actuator length and weight

Compact Bearing Design

Dual roller bearing support design allows for high force, durability, and long life in a space-saving package

RSX Oil Cooled Option

What does Oil Cooled mean?

An unpressurized synthetic oil bath around the screw and nut replaces the standard (extreme temperature and pressure rated) grease. The oil bath efficiently reduces internal temperatures while simultaneously providing lubrication.

Provides up to 2 times the work capacity compared to standard grease RSX actuators.

Available for all RSX sizes

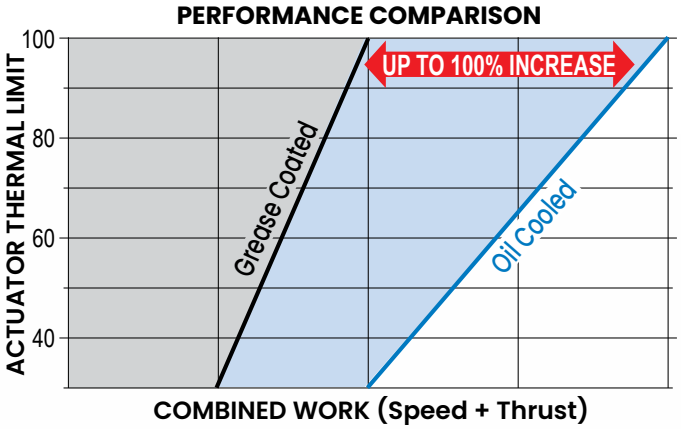

Features

RSX actuators with the Oil Cooled option have all the features of standard RSX. See pages 2, 3 & 4

Sight Glasses
Easily determine oil level

Oil Fill Port
Easy maintenance when required

Oil Drain Port
For ease of maintenance

Oil Retaining Replaceable Rod Seal Cartridge
One piece assembly designed for easy field replacement

RSX Extreme Force, Hydraulic Class Electric Actuator

Specifications

RSX SIZE (Tonnage Rating)	MAX STROKE**	SCREW TYPE	SCREW LEAD	MAX THRUST	DYNAMIC LOAD RATING	LEAD ACCURACY	BACKLASH	SCREW DIAMETER	BASE ACTUATOR INERTIA	INERTIA PER in OF STROKE
	in		turns/in	lbf	lbf	in/ft	in	in	lb-in²	lb-in²
10	59.1	BN01	1.00	20,000	22,500	0.0040	0.0150	2.00	19.968	0.405
	59.1	BN02	2.00	20,000	37,420	0.0040	0.0150	2.25	21.852	0.599
	50.0	RN12	2.12	20,000	58,921	0.0004	0.0012	1.89	19.105	0.345
15	59.1	BN01	1.00	30,000	22,500	0.0040	0.0150	2.00	19.968	0.405
	59.1	BN02	2.00	30,000	37,420	0.0040	0.0150	2.25	21.852	0.599
	50.0	RN12	2.12	30,000	60,541	0.0004	0.0012	1.89	19.105	0.345
20	50.0	RN12	2.12	40,000	60,541	0.0004	0.0012	1.89	19.105	0.345
25	26.0	RN10	2.54	50,000	99,519	0.0004	0.0012	2.48	105.883	1.026
33P*	26.0	RN10	2.54	66,000	99,519	0.0004	0.0012	2.48	105.883	1.026
50	24.8	RN10	2.54	100,000	113,529	0.0009	0.0012	2.95	301.906	2.086
	24.8	RN15	1.69	100,000	187,940	0.0009	0.0012	2.95	302.809	2.098
	mm		mm/rev	kN	kN	mm/300mm	mm	mm	kg-cm²	kg-cm²
10	1500	BN01	25.4	88.96	100.08	0.103	0.381	50.80	58.434	0.047
	1500	BN02	12.7	88.96	166.45	0.103	0.381	57.15	63.948	0.069
	1270	RN12	12.0	88.96	262.09	0.010	0.030	48.00	55.909	0.040
15	1500	BN01	25.4	133.45	100.08	0.103	0.381	50.80	58.434	0.047
	1500	BN02	12.7	133.45	166.45	0.103	0.381	57.15	63.948	0.069
	1270	RN12	12.0	133.45	269.30	0.010	0.030	48.00	55.909	0.040
20	1270	RN12	12.0	177.93	269.30	0.010	0.030	48.00	55.909	0.040
25	660	RN10	10.0	222.41	442.68	0.010	0.030	63.00	309.856	0.118
33P*	660	RN10	10.0	293.58	442.68	0.010	0.030	63.00	309.856	0.118
50	630	RN10	10.0	444.82	505.00	0.023	0.030	75.00	883.497	0.240
	630	RN15	15.0	444.82	836.00	0.023	0.030	75.00	886.139	0.242

*Pressing Variant, Contact Tolomatic about Ordering **Extended Stroke Options Available Upon Request compression (extend)

Weight and Reduction Inertia

	Actuator Weight (lb)							Motor Mount Inertia (in-lb²)				
RSX Size	Base	LMI	RP1	RP2	RP4	RP6	lb/in Stroke	LMI	RP1	RP2	RP4	RP6
10	102.0	65.1	85.7	81.4	-	-	2.45	52.10	64.18	30.41	-	-
15	102.0	65.1	87.4	82.5	-	-	2.45	52.10	74.79	30.41	-	-
20	102.0	59.9	83.1	82.1	-	-	2.30	52.10	74.39	33.85	-	-
25	286.3	123.2	202.1	205.8	-	-	4.42	170.55	172.41	83.32	-	-
33P	286.3	123.2	202.1	205.8	-	-	4.42	170.55	172.41	83.32	-	-
50	419.4	235.4	255.9	-	251.0	255.8	5.53	169.75	582.29	-	84.99	47.83

	Actuator Weight (kg)							Motor Mount Inertia (kg-cm²)				
RSX Size	Base	LMI	RP1	RP2	RP4	RP6	kg/mm stroke	LMI	RP1	RP2	RP4	RP6
10	46.3	29.5	38.9	36.9	-	-	0.044	152.66	188.04	89.09	-	-
15	46.3	29.5	39.6	37.4	-	-	0.044	152.66	219.15	89.09	-	-
20	46.3	27.2	37.7	37.3	-	-	0.041	152.66	217.97	99.18	-	-
25	129.9	55.9	91.7	93.3	-	-	0.079	499.71	505.15	244.14	-	-
33P	129.9	55.9	91.7	93.3	-	-	0.079	499.71	505.15	244.14	-	-
50	190.2	106.8	116.1	-	113.9	116.0	0.099	497.36	1706.11	-	248.71	139.97

TEMP. RANGE: Standard 4° to 54°C (40° to 130°F). For extended ranges -30C° to 60°C (-22° to 140°F) contact Tolomatic for application review.

RSX Extreme Force, Hydraulic Class Electric Actuator

Screw Buckling Load

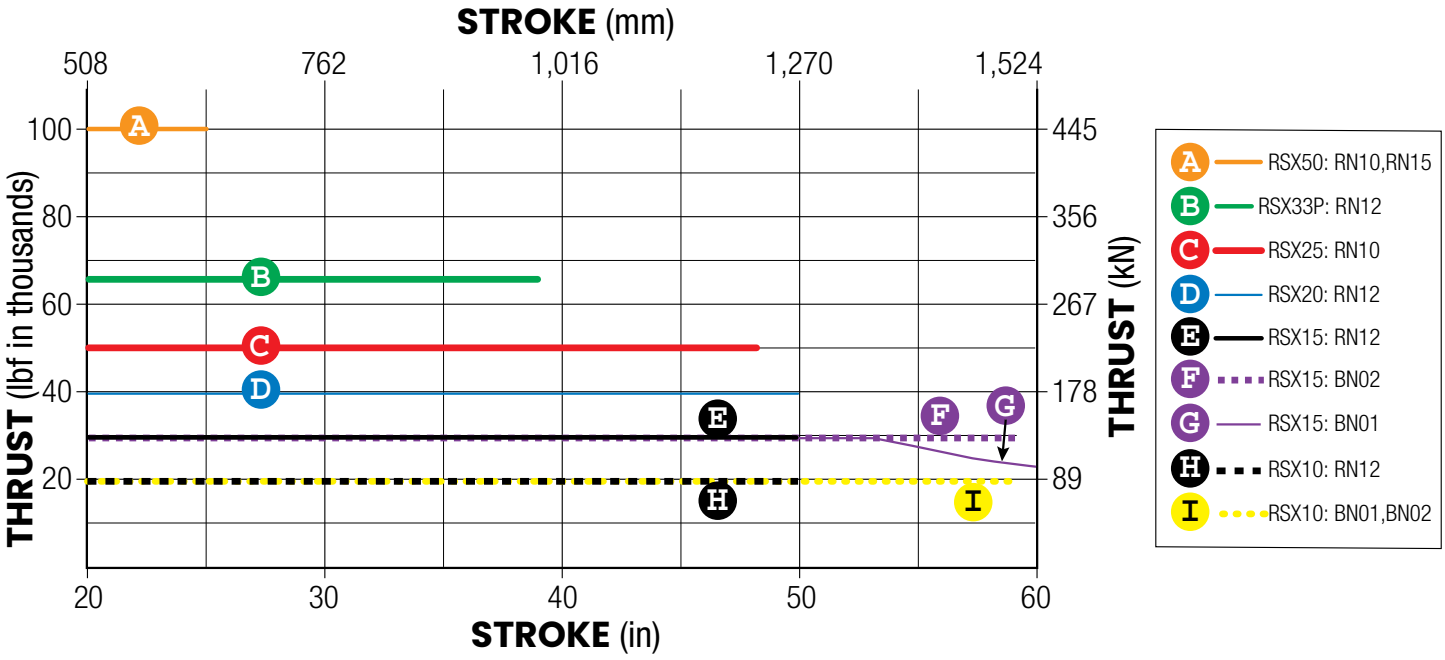

Critical Speed Capabilities

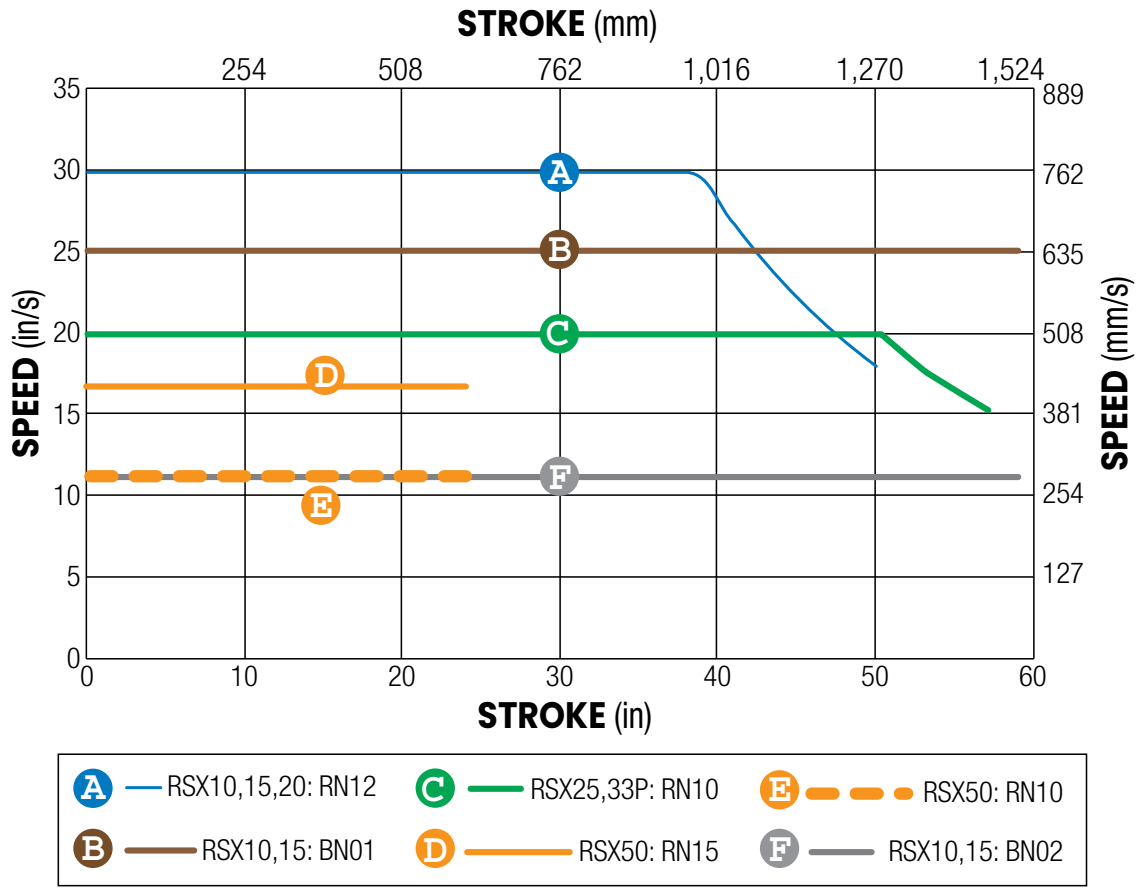

*NOTE: When using Trunnion Mount, (TRR) consider the stroke to be longer when determining Critical Speed and Buckling Load:

STROKE ADDER		
	mm	in
RSX10	72.4	2.85
RSX15	72.4	2.85
RSX20	0.0	0.00
RSX25	108.0	4.25

RSX Extreme Force, Hydraulic Class Electric Actuator

Expected Life:

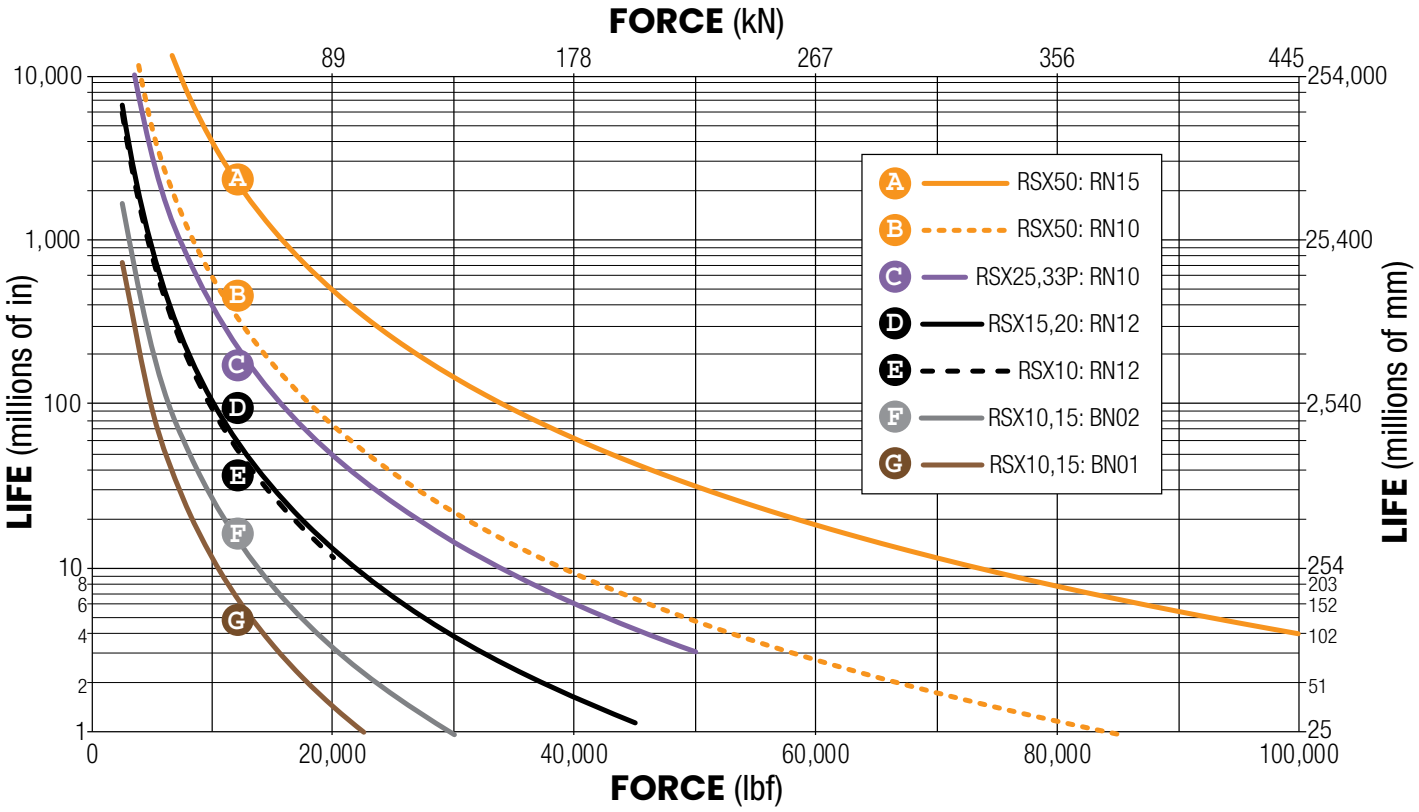

RSX Standard Actuators Expected Life:

NOTE: The L_{10} *expected life of a ball or roller screw linear actuator is expressed as the linear travel distance that 90% of properly maintained actuator are expected to meet or exceed. This is not a guarantee and this graph should be used for estimation purposes only.*

The underlying formula that defines this value is:

$$L_{10} = \left(\frac{C}{P_e}\right)^3 \bullet \ell \equiv$$

L_{10} *Travel life in millions of units (in or mm), where:*

C = Dynamic load rating (lbf) or *(N)*
P_e = Equivalent load (lbf) or *(N)*
If load is constant across all movements then:
actual load = equivalent load
ℓ = Screw lead (in/rev) *(mm/rev)*

*Use the "***Equivalent Load***" calculation below, when the load is not constant throughout the entire stroke. In cases where there is only minor variation in loading, use greatest load for life calculations.*

Where:

$$P_e = \sqrt[3]{\frac{L_1(P_1)^3 + L_2(P_2)^3 + L_3(P_3)^3 + L_n(P_n)^3}{L}}$$

P_e = Equivalent load (lbf) or *(N)*
P_n = Each increment at different load (lbf) or *(N)*
L = Total distanced traveled per cycle (extend + retract stroke)
$[L = L_1 + L_2 + L_3 + L_n]$
L_n = Each increment of stroke at different load (in) or *(mm)*

RSX Press Model Expected Life:

In the event an RSX actuator is used in a press application where the press stroke distance is less than the lead of the screw, calculation of its L10 expected life is modified to consider only the press move, because in press (and similar) applications repeated high force cycles at the same position of the roller screw focus the stress in one area, which may limit the life of the device. For these cases the equivalent load value for the L10 calculation is replaced with the pressing force of the press move only and screw lead is removed from the equation:

The underlying formula that defines this value is:

$$L_{10p} = \left(\frac{C}{P_p}\right)^3$$

L_{10p} *Life in Millions of press cycles, where:*

C = Dynamic load rating (lbf) or *(N)*
P_p = Pressing Force (lbf) or *(N)*

NOTE: The L10 life estimation method does not include failures caused by other conditions such as contamination, misalignment, improper lubrication and exceeding actuator specifications

RSX Extreme Force, Hydraulic Class Electric Actuator

Re-lubrication Recommendation:



On the RSX actuator there is a access hole on the side of the extrusion for applying grease directly to the nut.

Lubrication requirements for electric actuators depend on the motion cycle (velocity, force, duty cycle), type of application, ambient temperature, environmental surrounding and various other factors.

For many general purpose applications, Tolomatic ball screw actuators are typically considered lubricated for life unless otherwise specified, such as those actuator models outfitted with a re-lubrication feature. For roller screw or ball screw actuators outfitted with a re-lubrication feature, Tolomatic recommends to re-lubricate the actuator at least once per year or every 1,000,000 cycles, whichever comes first, to maximize service life. For more demanding applications such as pressing, high frequency or other highly stressed applications, the re-lubrication interval for these actuators will vary and will need to be more frequent. In these demanding applications, it is recommended to execute at least 5 full stroke moves every 5,000 cycles of operation (or more frequent if possible) to re-distribute the grease within the actuator.

Refer to the RSX Manual (2171-4007) for detailed re-lubrication instructions for both standard grease and oil filled (OIL option) actuators.

Food Grade RSX

The food grade RSX is a great option for the food & beverage processing environment.

Contact Tolomatic for lead time and application review.

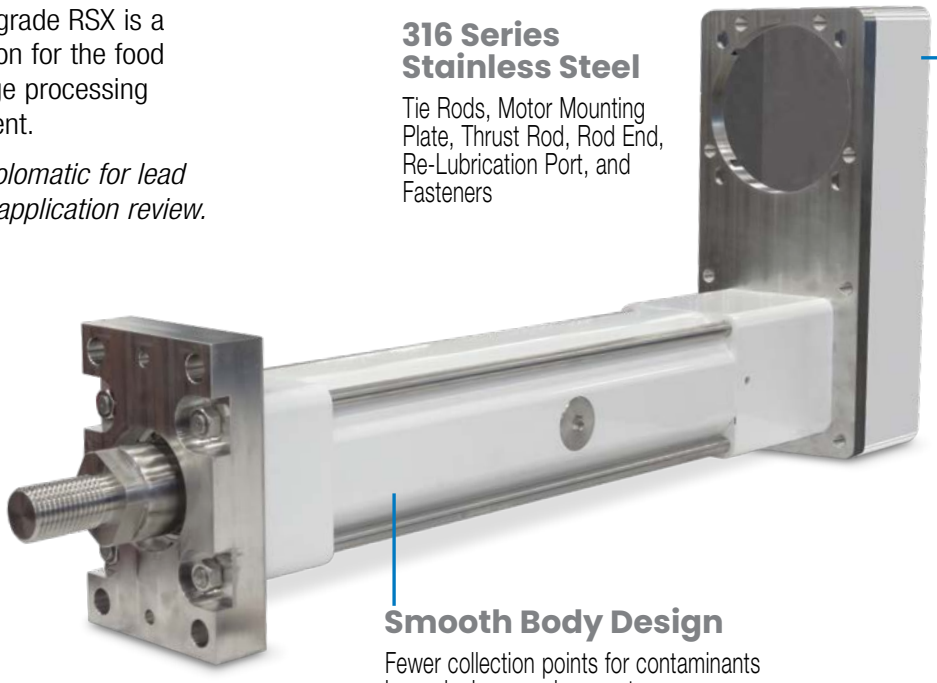

316 Series Stainless Steel

Tie Rods, Motor Mounting Plate, Thrust Rod, Rod End, Re-Lubrication Port, and Fasteners

Food Grade Paint

FDA & USDA approved

White paint reveals any foreign matter to ease clean-up

IP67 Standard

Static tested against ingress of dust and water for protection of internal components and long actuator life

Smooth Body Design

Fewer collection points for contaminants in wash-down environments

Features

RSX actuators with the Food Grade option have all the features of standard RSX. See pages 2, 3 & 4

RSX Extreme Force, Hydraulic Class Electric Actuator

LMI & RP Actuator Dimensions

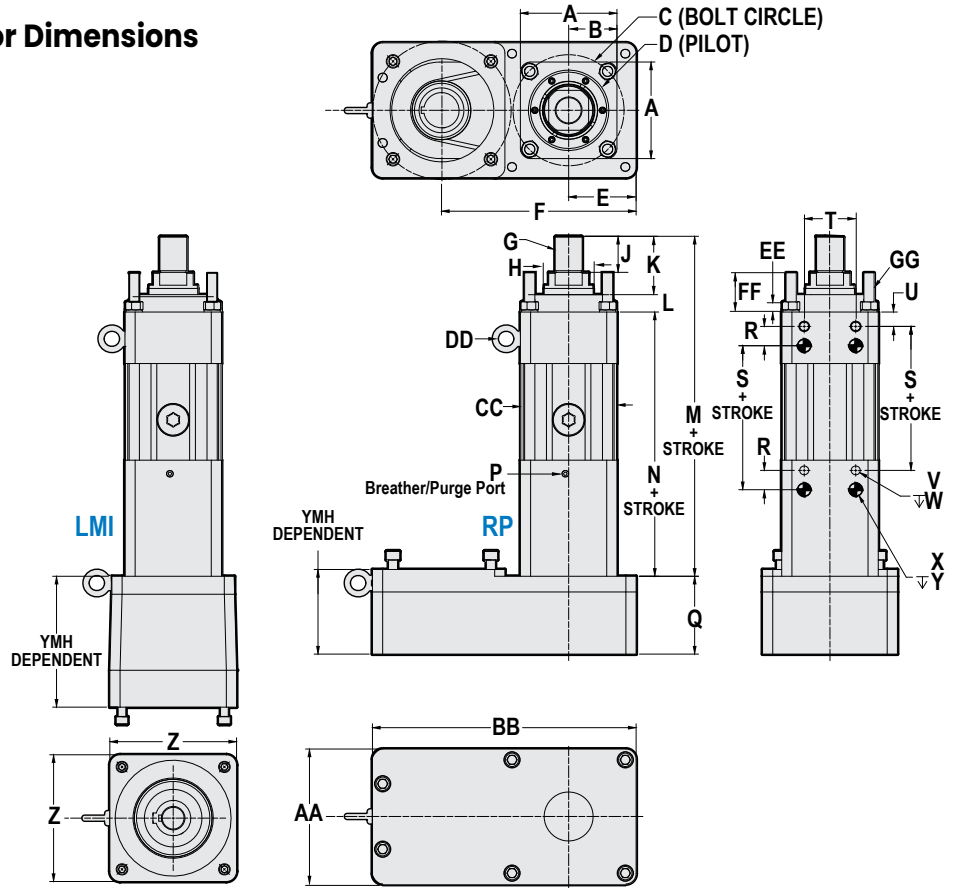

tolomatic.com/CAD
Download 3D CAD
Always use CAD solid model to determine critical dimensions

	10 & 15	20	25 & 33P
A	5.91	7.50	8.66
B	2.95	3.75	4.33
C	6.73	7.87	9.84
D	4.921 (+0.000) (-0.001)	4.921 (+0.000) (-0.001)	6.89 (+0.000) (-0.001)
E	4.13	4.13	5.63
F	RP1		
	12.00	12.00	16.65
	RP2		
	11.90	11.90	16.71
G	SR1 OPTION		
	1 7/8-12 UN-2A	2 1/2-12 UN-2A	2 1/2-8 UN-2A
Hø	2.9958 / 2.9980	2.9958 / 2.9980	3.9956 / 3.9980
THREAD LENGTH			
J	2.75	3.35	4.13
FULL RETRACT			
K	4.13	4.49	6.62
L1	1.06	1.06	1.30
L2	1.46	1.46	—

L1, M1 = Standard
L2, M2 = Oil Option

	10 & 15	20	25 & 33P
P	RC 1/8 -28 X 38.1 DP (Plugged)	RC 1/4 -19 X 38.1 DP (Plugged)	RC 1/4 -19 X 38.1 DP (Plugged)
Q	5.44	5.44	7.24
R	1.18	1.57	1.57
T	3.15	3.15	4.53
U	0.88	0.79	1.38
V	M16 x 2.0-6H	M20 x 2.5-6H	M20 x 2.5-6H
W	↧.63 (4)	↧ .79 (4)	↧ .79 (4)
X	Ø.7879/ Ø.7884	Ø.7879/ Ø.7889	Ø.7879/ Ø.7887
Y	↧ .59 (4)	↧ .59 (4)	↧ 1.18 (4)
Z	7.50	7.50	11.00
AA	8.25	8.25	11.25
BB	16.75	16.75	23.00
CC	5.85	5.85	8.46
DD	0.98	1.38	1.38
EE	0.60	0.91	0.91
FF	2.13	2.84	3.00
GG	M16 x 1.5-6H	M24 x 3.0-6H	M24 x 3.0-6H

Dimensions in inches

	10 & 15	20	25 & 33P
A	150.0	190.5	220.0
B	75.0	95.3	110.0
C	171.0	200.0	250.0
D	125.00 (+0.00) (-0.03)	125.00 (+0.00) (-0.03)	175.0 (+0.00) (-0.03)
E	104.8	104.8	142.9
F	RP1		
	304.8	304.8	422.9
	RP2		
	302.3	302.3	424.5
G	STANDARD		
	M42 x 4.5-6g	M64 x 3.0-6g	M64 x 3.0-6g
Hø	76.093 / 76.149	76.093 / 76.149	101.488 / 101.549
THREAD LENGTH			
J	69.9	85.1	105.0
FULL RETRACT			
K	104.8	114.1	168.2
L1	27.0	27.0	33.0
L2	37.0	37.0	—

L1, M1 = Standard
L2, M2 = Oil Option

	10 & 15	20	25 & 33P
P	RC 1/8 -28 X 38.1 DP (Plugged)	RC 1/4 -19 X 38.1 DP (Plugged)	RC 1/4 -19 X 38.1 DP (Plugged)
Q	138.1	138.1	183.9
R	30.0	40.0	40.0
T	80.0	80.0	115.0
U	22.3	20.0	35.0
V	M16 x 2.0-6H	M20 x 2.5-6H	M20 x 2.5-6H
W	↧ 16.0 (4)	↧ 20.0 (4)	↧ 20.0 (4)
X	20.013/ 20.025	20.013/ 20.038	20.013/ 20.033
Y	↧ 15.0 (4)	↧ 15.0 (4)	↧ 30.0 (4)
Z	190.5	190.5	285.8
AA	209.6	209.6	291.1
BB	425.5	425.5	584.2
CC	148.6	148.6	215.0
DD	25.0	35.0	35.0
EE	15.3	23.0	23.0
FF	54.2	72.1	76.2
GG	M16 x 1.5-6H	M24 x 3.0-6H	M24 x 3.0-6H

Dimensions in millimeters

	10 & 15			20	25 & 33P
	BN01	BN02	RN	RN	RN
M1	25.22	27.28	23.15	24.50	31.72
M2	25.61	27.68	23.54	24.89	—
N	20.03	22.09	17.96	18.94	23.80
S	13.19	15.25	11.12	11.40	14.53

Dimensions in inches

	10 & 15			20	25 & 33P
	BN01	BN02	RN	RN	RN
M1	640.6	693.0	588.0	622.3	805.8
M2	650.6	703.0	598.0	632.3	—
N	508.8	561.2	456.2	481.2	604.6
S	335.0	387.4	282.4	289.6	369.0

Dimensions in millimeters

RSX50 Dimensions

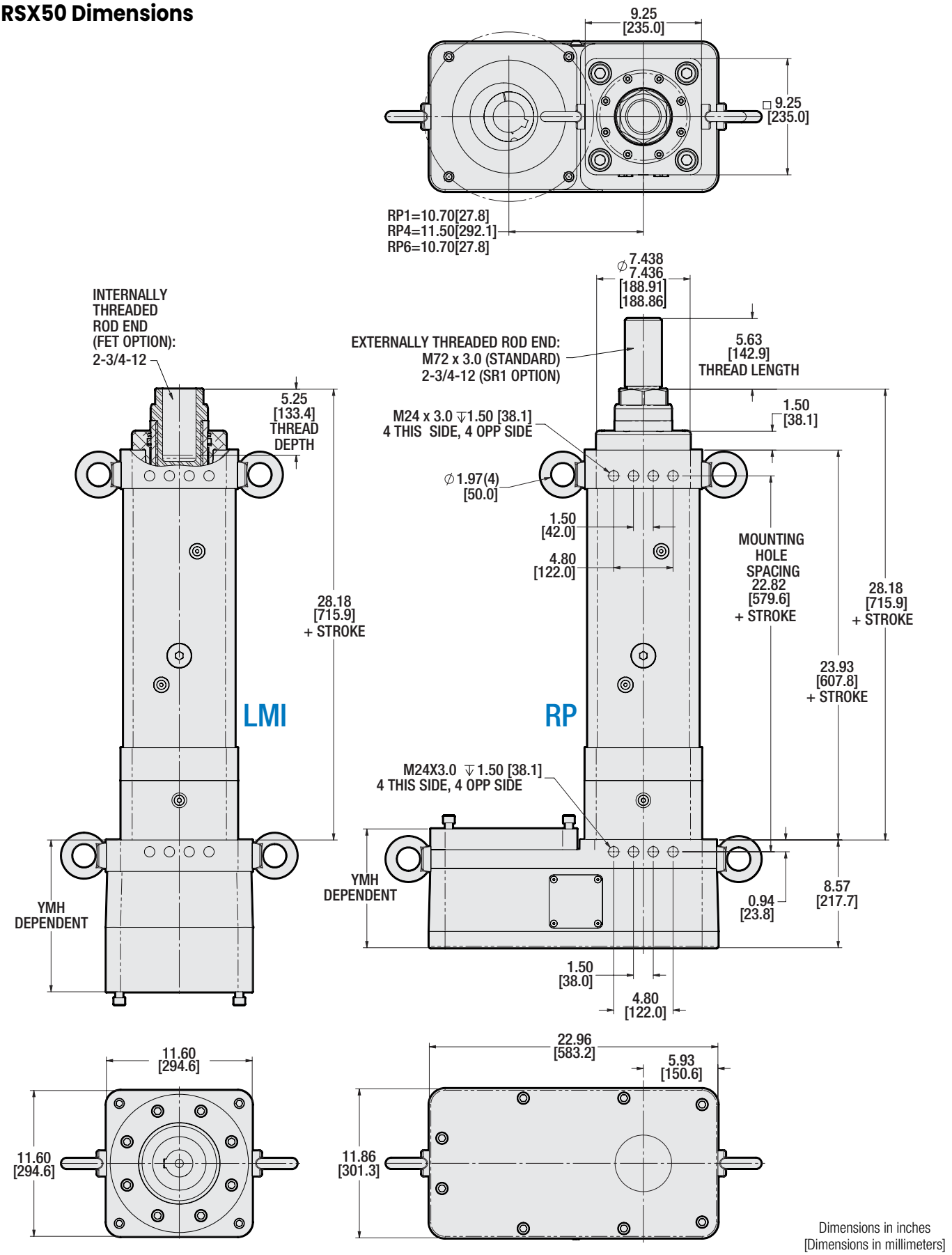

Dimensions in inches
[Dimensions in millimeters]

RSX Extreme Force, Hydraulic Class Electric Actuator

Clevis Option (CLV)

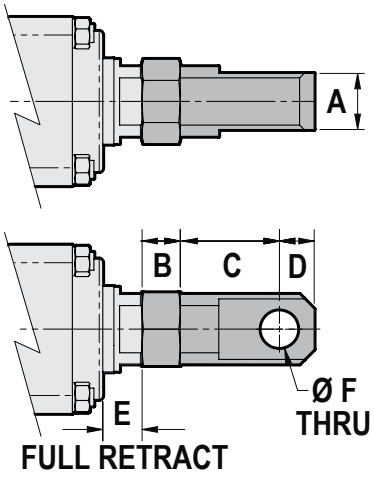

	10&15	20	25 & 33P	50
A	1.575/ 1.559	2.362/ 2.333	2.362/ 2.333	3.150/ 3.128
B	1.34	2.01	2.01	2.28
C	2.95	3.48	5.39	6.61
D	1.22	1.77	1.77	2.76
E	1.38	1.21	2.49	2.09
F	1.420/	1.774/ 1.772	1.774/ 1.772	2.759/ 2.756

Dimensions in inches

	10&15	20	25 & 33P	50
A	50.00/ 49.59	60.00/ 59.26	60.00/ 59.26	80.00/ 79.46
B	34.0	51.0	51.0	58.0
C	88.3	137.0	137.0	168.0
D	31.0	45.0	45.0	70.0
E	35.0	30.7	63.2	53.2
F	36.06/ 36.00	45.06/ 45.00	45.06/ 45.00	70.07/ 70.00

Dimensions in millimeters

Front Flange Option (FFG)

	10&15	20	25 & 33P
A	2.44	2.99	3.35
B	9.84	11.81	14.17
C	8.19	10.04	11.81
D	0.4734/ 0.4729	0.6310/ 0.6300	0.7887/ 0.7879
E	0.47	0.63	0.79
F	4.96	2.17	2.56
G	–	6.50	7.48
H	6.50	8.27	9.65
J	0.87	0.87	1.03

Dimensions in inches

	10&15	20	25 & 33P
A	62.0	86.0	85.0
B	250.0	300.0	360.0
C	208.0	255.0	300.0
D	12.025/ 12.013	16.030/ 16.000	20.033/ 20.013
E	12.0	16.0	20.0
F	126.0	55.0	65.0
G	–	165.0	190.0
H	165.0	210.0	245.0
J	22.0	22.0	26.2

Dimensions in millimeters

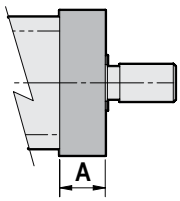

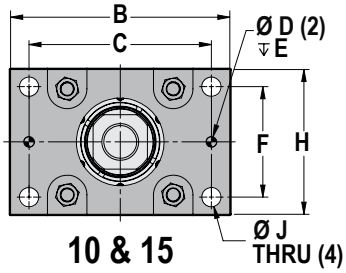

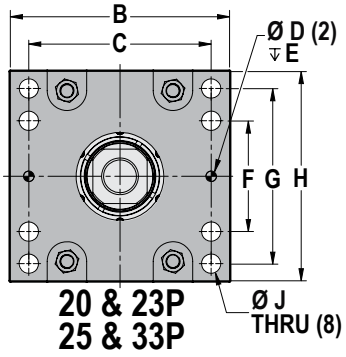

Size	FFG weight adder
10 & 15	26 lb (12 kg)
20	54 lb (24 kg)
25 & 33P	82 lb (37 kg)
50	52 lb (24 kg)

Front Flange Option (FFG) RSX50

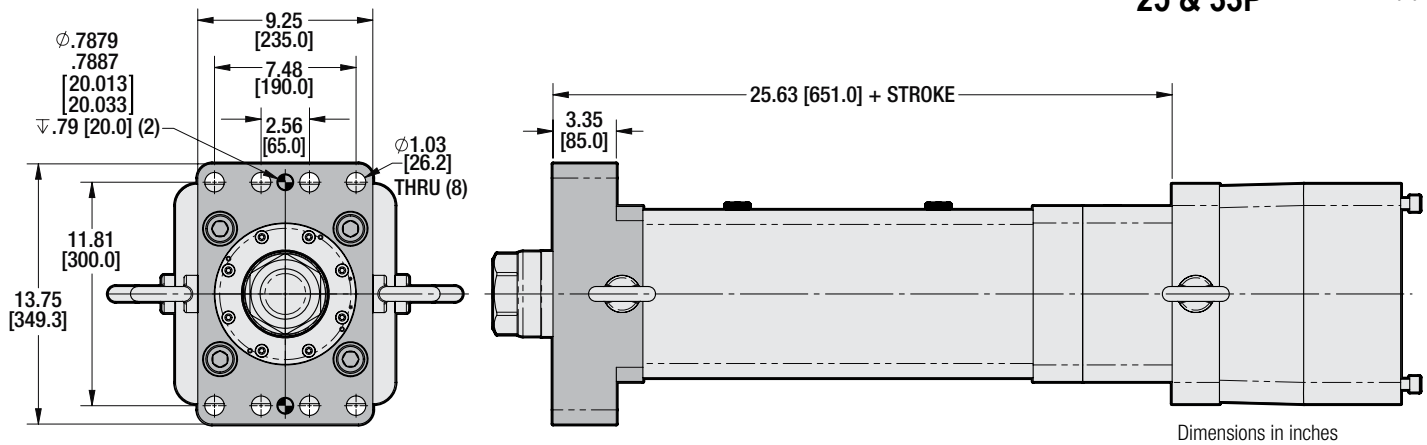

Dimensions in inches
[Dimensions in millimeters]

RSX Extreme Force, Hydraulic Class Electric Actuator

Mounting Plate Option (MP2) Not available for RSX50

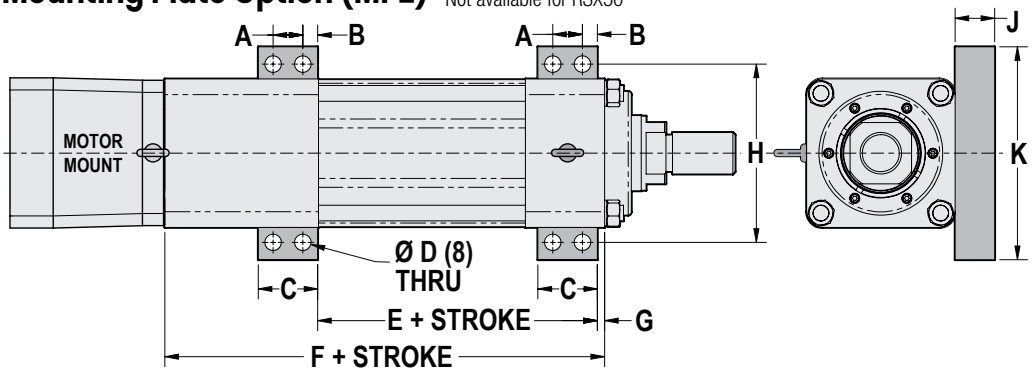

		10&15	20	25 & 33P
	A	1.18	1.57	1.57
	B	0.59	0.79	0.89
	C	2.36	3.07	3.35
	D	0.66	0.83	0.83
E	RN	11.12	11.37	14.53
	BN01	13.19	–	–
	BN02	15.25	–	–
F	RN	22.09	18.94	23.80
	BN01	20.03	–	–
	BN02	22.09	–	–
	G	0.29	0.04	0.49
	H	7.09	9.06	10.24
	J	1.57	1.77	1.77
	K	8.46	10.60	12.01

Dimensions in inches

		10&15	20	25 & 33P
	A	30.0	40.0	40.0
	B	15.0	19.0	22.5
	C	60.0	78.0	85.0
	D	16.7	21.0	21.0
E	RN	282.4	288.9	369.0
	BN01	335.0	–	–
	BN02	387.4	–	–
F	RN	456.2	481.2	604.6
	BN01	508.8	–	–
	BN02	561.2	–	–
	G	7.3	1.0	12.5
	H	180.0	230.0	260.0
	J	40.0	45.0	45.0
	K	215.0	270.0	305.0

Dimensions in millimeters

Extended Tie Rod Option (XT) Not available for RSX50

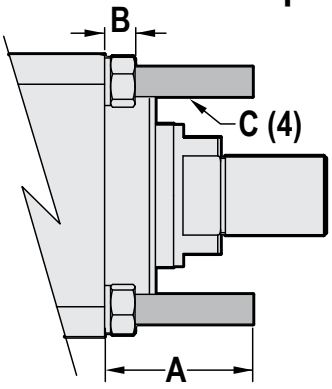

A = Customer Specified Length

		10&15	20	25 & 33P
A	MIN	1.97	1.97	1.97
	MAX	3.94	3.94	3.94
B		0.60	0.91	0.91
C [4] (metric)		M16 x 1.5-6g	M24 x 3.0-6g	M24 x 3.0-6g

Dimensions in inches

		10&15	20	25 & 33P
A	MIN	50.0	50.0	50.0
	MAX	100.0	100.0	100.0
B		16.3	23.0	23.0
C [4]		M16 x 1.5-6g	M24 x 3.0-6g	M24 x 3.0-6g

Dimensions in millimeters

RSX Extreme Force, Hydraulic Class Electric Actuator

Trunnion Option (TRR) Not available for RSX50

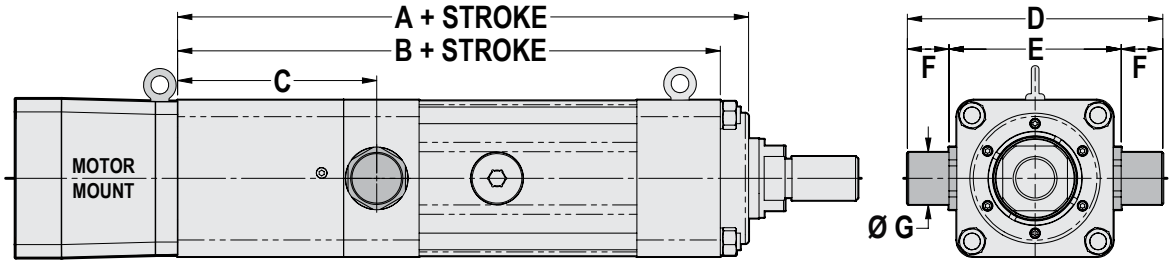

NOTE: TRR option reduces max stroke:
RSX10 & 15 sizes by 3.3 in (84 mm)
RSX25 size by 4.3 in (109 mm)

RSX20 TRR

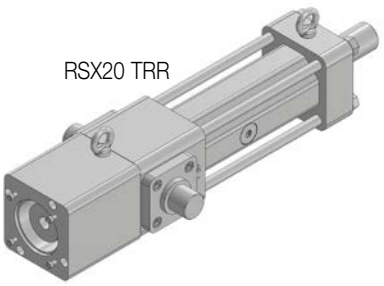

NOTE: RSX20 has TRR bolt-on design, other RSX sizes have TRR screw-in design.

		10 & 15	20	25 & 33P
A	RN	21.91	20.05	29.56
	BN01	23.94	–	–
	BN02	26.00	–	–
B	RN	20.85	19.00	28.10
	BN01	22.88	–	–
	BN02	24.90	–	–
C		7.87	2.90	10.56
D		9.65	14.34	13.39
E		6.50	10.40	9.45
F		1.57	1.97	1.97
G		1.968/ 1.966	2.361/ 2.359	2.479/ 2.477

Dimensions in inches

		10 & 15	20	25 & 33P
A	RN	556.5	509.2	750.8
	BN01	608.2	–	–
	BN02	660.6	–	–
B	RN	529.5	482.1	713.7
	BN01	581.2	–	–
	BN02	633.6	–	–
C		199.9	76.0	268.1
D		245.0	364.2	340.0
E		165.0	264.2	240.0
F		40.0	50.0	50.0
G		49.98/ 49.94	59.97/ 59.92	62.97/ 62.92

Dimensions in millimeters

Rod Extension Option (XR) Not available for RSX50

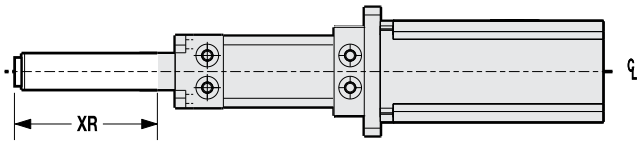

The thrust rod length can be extended by specifying the rod extension option. This does not increase the working stroke, only the length of the thrust rod.

NOTE: Please consult Tolomatic if your application requires rod extension length greater than 3.9 in (100 mm).

RSX Extreme Force, Hydraulic Class Electric Actuator

Switches



RSX actuators offer a wide range of sensing choices. There are 12 switch choices: reed, solid state PNP (sourcing) or solid state NPN (sinking); in normally open or normally closed; with flying leads or quick-disconnect.

Commonly used for end-of-stroke positioning, these switches allow installation anywhere along the entire actuator length. The internal magnet is a standard feature. Switches can be installed in the field at any time.

Switches are used to send digital signals to PLC (programmable logic controller), TTL, CMOS circuit or other controller device. Switches contain reverse polarity protection. Solid state QD cables are shielded; shield should be terminated at flying lead end.

All switches are CE rated and are RoHS compliant. Switches feature bright red or yellow LED signal indicators; solid state switches also have green LED power indicators.

RoHS COMPLIANT CE

	Order Code	Lead	Switching Logic	Power LED	Signal LED	Operating Voltage	**Power Rating (Watts)	Switching Current (mA max.)	Current Consumption	Voltage Drop	Leakage Current	Temp. Range	Shock / Vibration
REED	RY	5m	SPST Normally Open	—	Red	5 - 240 AC/DC	**10.0	100mA	—	3.0 V max.	—	14 to 158°F [-10 to 70°C]	50 G / 9 G
	RK	QD*		Tolomatic 81009082									
	NY	5m	SPST Normally Closed	—	Yellow	5 - 110 AC/DC							
	NK	QD*		Tolomatic 81009084									
SOLID STATE	TY	5m	PNP (Sourcing) Normally Open	Green	Yellow	10 - 30 VDC	**3.0	100mA	20 mA @ 24V	2.0 V max.	0.05 mA max.		
	TK	QD*		Tolomatic 81009088									
	KY	5m	NPN (Sinking) Normally Open	Green	Red								
	KK	QD*		Tolomatic 81009090									
	PY	5m	PNP (Sourcing) Normally Closed	Green	Yellow								
	PK	QD*		Tolomatic 81009092									
	HY	5m	NPN (Sinking) Normally Closed	Green	Red								
	HK	QD*		Tolomatic 81009094									

*QD = Quick-disconnect Enclosure classification IEC 529 IP67 (NEMA 6) CABLES: Robotic grade, oil resistant polyurethane jacket, PVC insulation

⚠ **WARNING: Do not exceed power rating (Watt = Voltage x Amperage). Permanent damage to sensor will occur.

Switch Installation: RSX10, 15, 20, & 25



Place switch bracket onto any one of the four tie rods that run the length of the extruded tube. Insert the switch with set screw and the word "Tolomatic" facing up and slide into the mating slot on the bracket. Position the bracket with the switch to the exact location desired, with the bracket tight to the surface of the extrusion, then lock the bracket securely into place by tightening the set screw with an Allen wrench. Then tighten the switch into the bracket with a small slotted screwdriver.

Switch Installation: RSX50

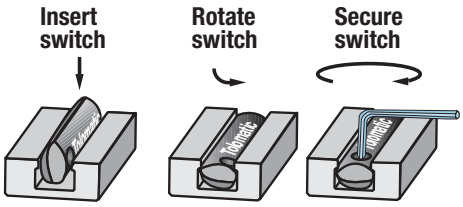

Place switch in the groove on tube at desired location with "Tolomatic" facing outward. While applying light pressure to the switch, rotate the switch is halfway into the groove. Maintaining light pressure, rotate the switch in the opposite direction until it is fully inside the groove with "Tolomatic" visible. Re-position the switch to the exact location and lock the switch securely into place by tightening the screw on the switch.

Switch Wiring Diagrams

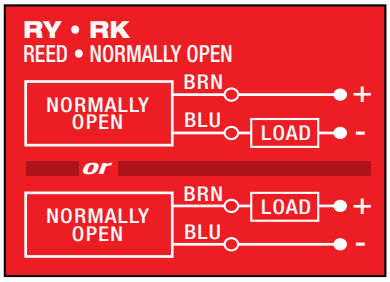

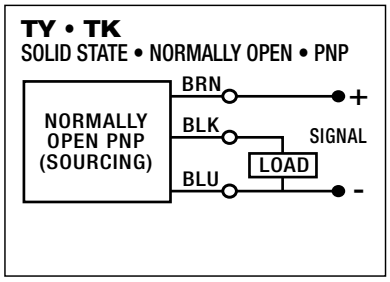

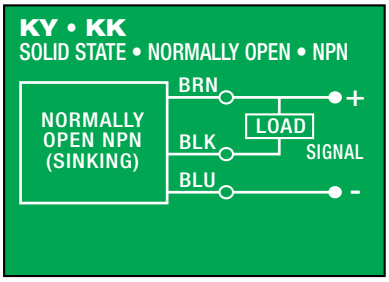

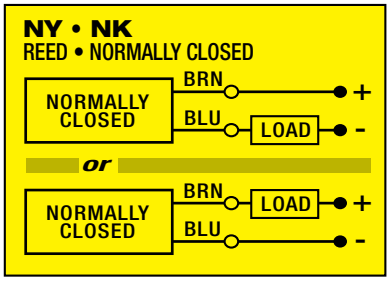

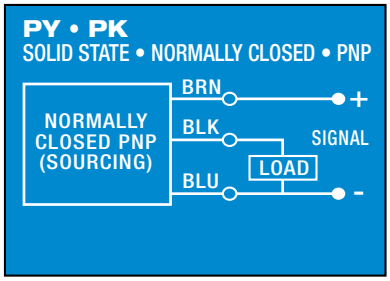

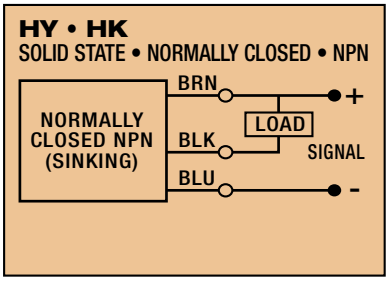

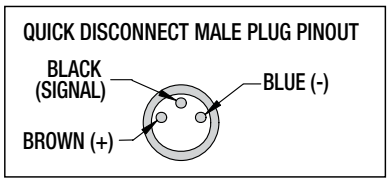

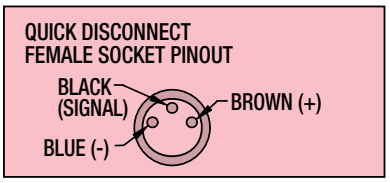

Switch Dimensions

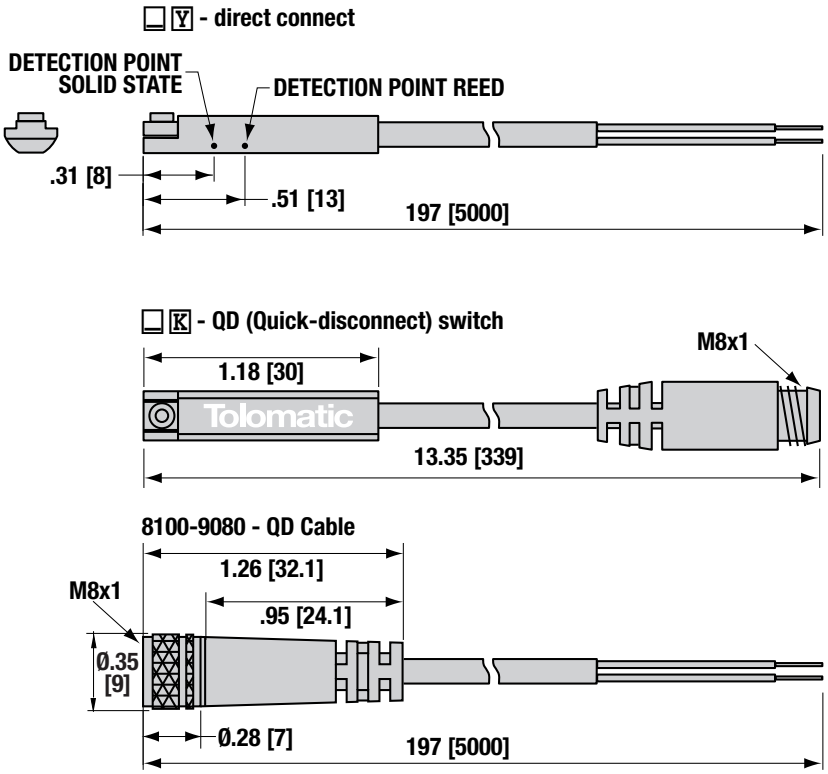

Switch Mounting

RSX10, 15, 20, & 25

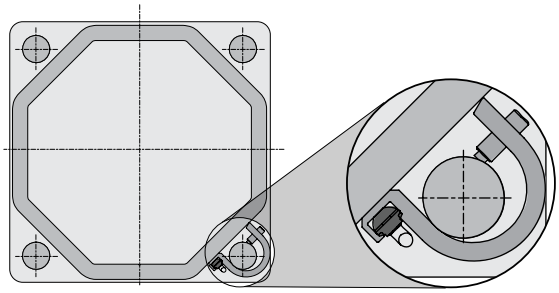

RSX50

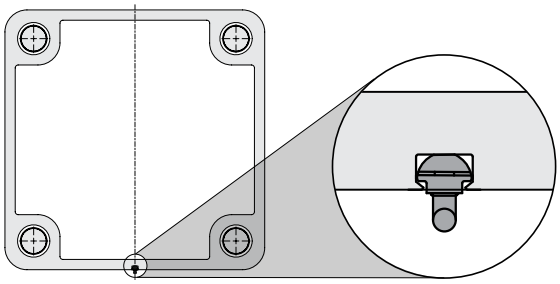

RSX Extreme Force, Hydraulic Class Electric Actuator

Application Data Worksheet

USE THE TOLOMATIC SIZING AND SELECTION SOFTWARE AVAILABLE ON-LINE AT www.tolomatic.com or call Tolomatic at 1-800-328-2174. We will provide any assistance needed to determine the proper actuator for the job.

ACTUATOR ORIENTATION

☐ Horizontal ☐ Vertical-Motor End Up ☐ Angled ☐ Vertical-Motor End Down







Angle: _____ degrees



ACTUATOR REQUIREMENTS

Stroke Length: _____ ☐ inches ☐ millimeters

No. of Cycles: _____ ☐ per minute ☐ per hour

Actuator to Hold Position: ☐ required ☐ not required

If Hold Required: ☐ after move ☐ during power loss

Motor: ☐ Third Party Motor ☐ Tolomatic Motor

APPLICATION ENVIRONMENT

Ambient Temperature: _____ ☐ °F ☐ °C

Actuator Environment Description and Ingress Protection Requirements:

MOTION & FORCES

Extend

Move Distance: _____ ☐ in ☐ mm

Move Time: _____ seconds

Max. Speed: _____ ☐ in/s ☐ mm/s

Dwell Time After Move: _____ seconds

Retract

Move Distance: _____ ☐ in ☐ mm

Move Time: _____ seconds

Max. Speed: _____ ☐ in/s ☐ mm/s

Dwell Time After Move: _____ seconds

Load

Load: _____ ☐ lb ☐ kg

Supported by Actuator: _____ %

Moment Prevention: ☐ Guided/Supported

Center of Load:

D_X: _____ ☐ in ☐ mm

D_Y: _____ ☐ in ☐ mm

D_Z: _____ ☐ in ☐ mm

Assign to Moves: ☐ Extend ☐ Retract

Force

Force: _____ ☐ lb_f ☐ N

Force Direction: ☐ Toward ☐ Away

Direction of Applied Force: ☐ F_x ☐ F_y ☐ F_z

Center of Applied Force:

D_X: _____ ☐ in ☐ mm

D_Y: _____ ☐ in ☐ mm

D_Z: _____ ☐ in ☐ mm

Assign to Moves: ☐ Extend ☐ Retract

RSX Extreme Force, Hydraulic Class Electric Actuator

Selection Guidelines

1 ESTABLISH MOTION PROFILE

Using the application stroke length, desired cycle time, loads and forces, establish the motion profile details including linear velocity and force in each of its segments.

2 SELECT ACTUATOR SIZE AND SCREW TYPE

Based on the required velocities and forces, select an actuator size including the lead of the roller screw assembly..

3 VERIFY CRITICAL SPEED OF THE SCREW

Verify that the application's peak linear velocity does not exceed the critical speed value for the size and lead of the screw selected.

4 VERIFY AXIAL BUCKLING STRENGTH OF THE SCREW

Verify that the peak force does not exceed the critical buckling force for the size of the screw selected.

5 COMPARE APPLICATION'S PEAK PARAMETERS TO PEAK CAPACITY (PEAK REGION) OF SELECTED ACTUATOR

Calculate the application's required peak force and peak velocity and compare to the graphs. The selection must satisfy the application's peak requirements.

6 CONSIDER THERMAL MITIGATION

Determine whether the oil cooled option is necessary based on the calculated screw thermals in the application.

7 CONSIDER LUBRICATION INTERVAL

Evaluate the recommended lubrication interval with respect to the application motion profile.
See page 9 for complete lubrication information.

The above guidelines are for reference only.
Use Tolomatic online sizing software for best results.

8 TEMPERATURE CONSIDERATIONS

If the application's ambient temperature lies outside of the standard range (see page 6), contact Tolomatic.

9 SELECT A MOTOR-ACTUATOR CONFIGURATION

Select an inline or a reverse-parallel motor configuration.

10 ESTABLISH TOTAL TORQUE REQUIREMENTS

Calculate total system inertia, the peak and the RMS torque required from the motor to overcome internal friction, external forces and accelerate/decelerate the load.

11 SELECT A MOTOR

Use the obtained total torque value to select a motor and a reduction device (if required). Verify that the peak torque value is below the motor's peak torque curve, and that the continuous torque value is below the motor's continuous torque curve. Verify the minimum torque margin (15%). Verify the inertia match.

12 SELECT OPTIONAL POSITION SENSORS

12 sensor choices include: reed, solid state PNP or NPN, all in normally open or normally closed, with flying leads or quick-disconnect couplers.

13 SELECT ACTUATOR MOUNTING

Mounting options include: TRN trunnion mount, FFG front flange mount, MP2 mounting plates.

14 SELECT ROD END OPTIONS

The default rod end is the SR1 external (male) thread US Conventional. Rod end options include: CLV clevis rod end. Available for the RSX50 is FET internal (female) thread US Conventional.

RSX Extreme Force, Hydraulic Class Electric Actuator

Ordering

ACTUATOR **OPTIONS**

RSX 15 RN12 SM4500 RP1 HT1 FFG OIL CLV XR10 KK2 YM_ _ _

MODEL & MOUNTING

RSX	Rod-Style Actuator

SIZE (TONNAGE RATING)

10, 15, 20, 25, 50	
33P†	Press Models

†Contact Tolomatic for ordering

NUT/SCREW

SIZE	CODES
10	RN12, BN01, BN02
15	RN12, BN01, BN02
20	RN12
25	RN10
33P†	RN10
50	RN10, RN15

RN = Roller Nut/Screw
BN = Ball Nut/Screw
†Contact Tolomatic for ordering

STROKE LENGTH

SM_ _ _	Enter desired stroke length in millimeters
for RSX50	Stroke lengths (mm): 180, 330, or 630

See page 6 for maximum stroke lengths available

Not all codes listed are compatible with all options. Contact Tolomatic with any questions.

MOTOR MOUNTING

LMI	In-line motor mount
RP1	1:1 ratio, reverse parallel motor mount (belted)
RP2	2:1 ratio, reverse parallel motor mount (belted)
RP4	4:1 ratio, reverse parallel motor mount (geared)
RP6	6:1 ratio, reverse parallel motor mount (geared)

STANDARD OR HIGH TORQUE

ST1*	Standard Actuator
HT1	High Torque Option

*RSX10 Only

TRUNNION MOUNT**

TRR	Trunnion mount

NOTE: Trunnion mount is not available for field retrofit, contact Tolomatic for details

**Not available for RSX50

ENVIRONMENTAL PROTECTION

IP65	Standard
IP67	Ingress protection and thrust rod scraper

ACTUATOR MOUNTING

For all motor mounts:

FFG	Front Flange Mount
MP2**	Mounting Plates (2 required)
XT**	Extended Tie Rods (min. 50mm, max. 100mm)

**Not available for RSX50

OIL COOLED

OIL	For extended high duty cycle/high force performance

NOTE: The RSX actuator with oil cooled option is IP67 rated. To get a motor gasket select IP67 option

ROD END

Externally threaded rod end is standard

CLV	Clevis Rod End
SR1	External Thread, US Standard
FET	Internal Thread, US Standard RSX50 only

ROD EXTENSION**

XR_ _ _	Enter desired rod extension in millimeters

NOTE: XR option does not increase the working stroke, only the length of the thrust rod.

NOTE: Please consult Tolomatic if your application requires rod extension length greater than 3.9 in (100 mm).

**Not available for RSX50

SWITCHES

TYPE	LOGIC	NORMALLY	QUICK-DISCONNECT	CODE	QUANTITY	LEAD LENGTH
REED	SPST	Open	no	RY	After code enter quantity desired	5 meters (16.4 feet)
			yes	RK		
		Closed	no	NY		
			yes	NK		
SOLID STATE	PNP	Open	no	TY		
			yes	TK		
	NPN	Open	no	KY		
			yes	KK		
	PNP	Closed	no	PY		
			yes	PK		
	NPN	Closed	no	HY		
			yes	HK		

YOUR MOTOR HERE

YM_ _ _ _ _	Motor mount for non-Tolomatic motor. www.tolomatic.com/YMH

NOTE: Brakes mounted on reverse parallel motor mounts (especially in vertically positioned actuators) will not prevent back driving of the screw and the load falling under gravity in the event of a timing belt failure. An inline motor mount with a fail-safe brake mounted directly to the actuator shaft or a special geared or thru-shaft reverse parallel construction should be considered if a brake is required in a safety critical application. Contact Tolomatic for alternate reverse parallel brake mounting options.

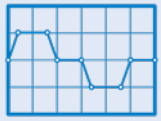

sizeit.tolomatic.com for fast, accurate actuator selection

Tolomatic™

Linear Motion Solutions

ELECTRIC LINEAR ACTUATORS

Rod -Screw-Drive
Rodless Belt-Drive



SERVO LINEAR ACTUATORS

Rod-Style Integrated Motor
ServoWeld



PNEUMATIC LINEAR ACTUATORS

Rodless Band Cylinders
Cable Cylinders



POWER TRANSMISSION

Right Angle Gearboxes
Industrial Caliper Disc Brakes

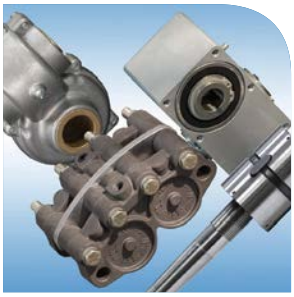

USA – Headquarters

Tolomatic, Inc.
Hamel MN 55340 USA

763-478-8000
1-800-328-2174
sales@tolomatic.com

tolomatic.com

MÉXICO

Service Center
Querétaro, Mexico
El Marqués, México

+1 (763) 478-8000
help@tolomatic.com

EUROPE

Tolomatic Europe GmbH
Rüsselsheim, Germany

+49 6142 17604-0
help@tolomatic.eu

tolomatic.com/de

CHINA

Tolomatic Automation Products (Suzhou) Co. Ltd.
Suzhou, Jiangsu, China

+86 512 6750 8506
TolomaticChina@tolomatic.com

tolomatic.cn

Learn More About Tolomatic

©2026. All brand and product names are trademarks of their respective owners. Information in this document is believed accurate at time of printing. However, Tolomatic assumes no responsibility for its use or for any errors that may appear in this document. Tolomatic reserves the right to change the design or operation of the equipment described herein and any associated motion products without notice. Information in this document is subject to change without notice.

Visit www.tolomatic.com for the most up-to-date technical information.