Tolomatic™
EXCELLENCE IN MOTION

Parts Sheet

0701-0247_04

Hydraulic/Mechanical Dual Function Caliper Disc Brake

HME20 Series

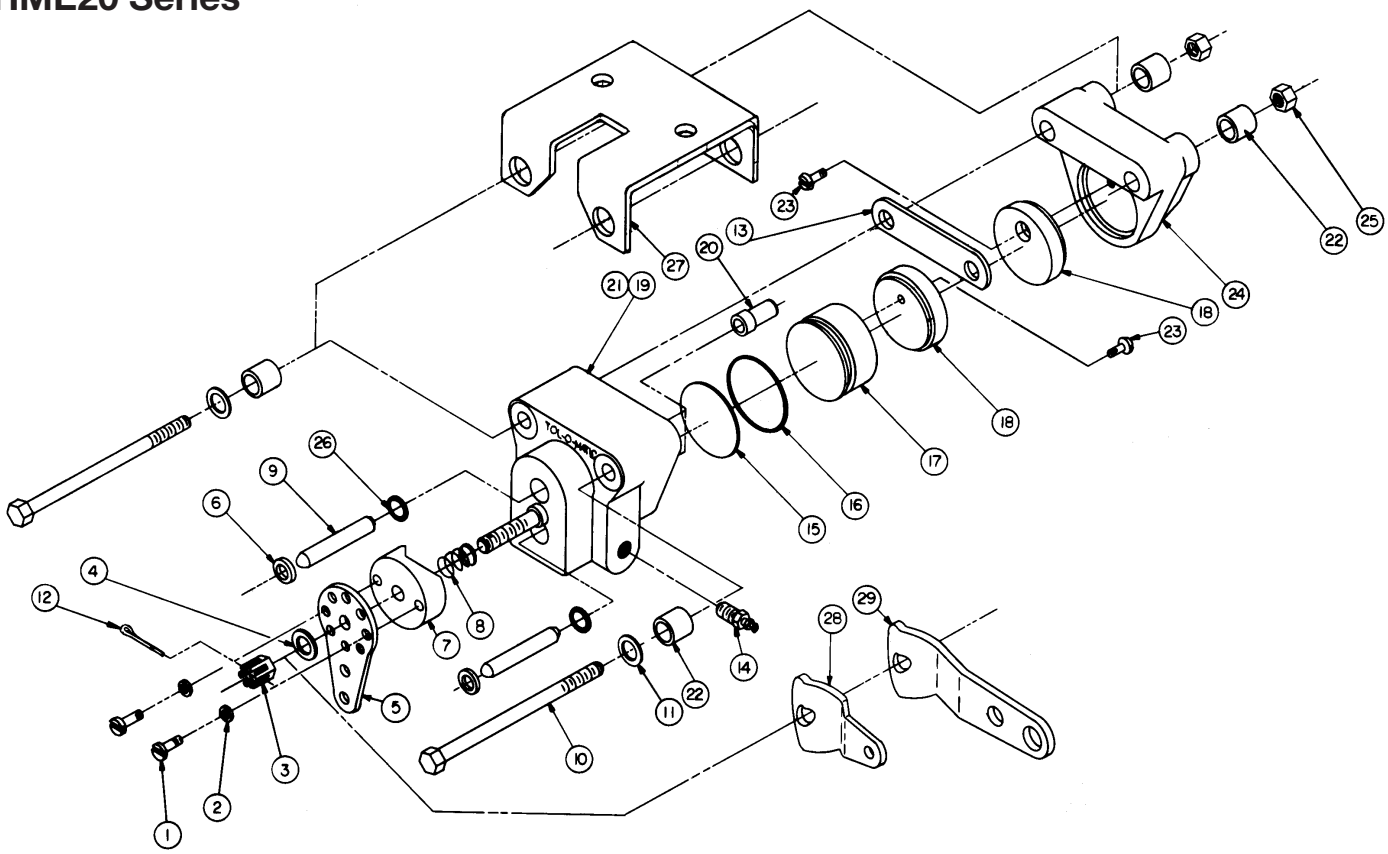

NOTE: This mechanical caliper is not self compensating for wear. It must be adjusted during initial installation and periodically thereafter throughout the Linings' life.

ITEM	PART NO.	DESCRIPTION	ASSEMBLY MODEL NUMBER																							
			HME20 MAFC 0755-0200	HME20 MBFC 0755-0210	HME20 SAFC 0755-0230	HME20 SBFC 0755-0240	HME20 LAFC 0755-0260	HME20 LBFC 0755-0270	HME20 MAC 0755-0300	HME20 MBC 0755-0310	HME20 SAC 0755-0330	HME20 SBC 0755-0340	HME20 LAC 0755-0360	HME20 LBC 0755-0370	HME20 MAFCG 0755-0500	HME20 MBFCG 0755-0510	HME20 SAFCG 0755-0530	HME20 SBFCG 0755-0540	HME20 LAFCG 0755-0560	HME20 LBFCG 0755-0570	HME20 MACG 0755-0600	HME20 MBCG 0755-0610	HME20 SACG 0755-0630	HME20 SBCG 0755-0640	HME20 LACG 0755-0660	HME20 LBCG 0755-0670
1.	0707-1012	Screw	2	2					2	2					2	2					2	2				
2.	0707-1011	Lock Washer	2	2					2	2					2	2					2	2				
3.	0707-1008	Slotted Hex Nut	1	1	1	1	1	1	1	1	1	1	1	1	1	1	1	1	1	1	1	1	1	1	1	1
4.	0701-1007	Flat Washer	1	1	2	2	2	2	1	1	2	2	2	2	1	1	2	2	2	2	1	1	2	2	2	2
5.	0707-1007	Lever Arm	1	1					1	1					1	1					1	1				
6.	0743-1038	Wiper Arm	2	2	2	2	2	2	2	2	2	2	2	2	2	2	2	2	2	2	2	2	2	2	2	2
7.	0707-1006	Cam	1	1					1	1					1	1					1	1				
8.	0707-1004	Compression Spring	1	1	1	1	1	1	1	1	1	1	1	1	1	1	1	1	1	1	1	1	1	1	1	1
9.	0743-1036	Actuating Pin	2	2	2	2	2	2	2	2	2	2	2	2	2	2	2	2	2	2	2	2	2	2	2	2
10.	0724-1105	Bolt, HHC, 3.75"							2	2	2	2	2	2							2	2	2	2	2	2
	0720-1105	Bolt, HHC, 4.50"	2	2	2	2	2	2							2	2	2	2	2	2						
11.	0720-1007	Flat Washer							2	2	2	2	2	2							2	2	2	2	2	2
12.	0743-1048	Cotter Pin	1	1	1	1	1	1	1	1	1	1	1	1	1	1	1	1	1	1	1	1	1	1	1	1
13.	0743-1004	Spacer .094" THK		1		1		1		1		1		1		1		1		1		1		1		1

			ASSEMBLY MODEL NUMBER																							
			HME20 MAFC 0755-0200	HME20 MBFC 0755-0210	HME20 SAFC 0755-0230	HME20 SBFC 0755-0240	HME20 LAFC 0755-0260	HME20 LBFC 0755-0270	HME20 MAC 0755-0300	HME20 MBC 0755-0310	HME20 SAC 0755-0330	HME20 SBC 0755-0340	HME20 LAC 0755-0360	HME20 LBC 0755-0370	HME20 MAFCG 0755-0500	HME20 MBFCG 0755-0510	HME20 SAFCG 0755-0530	HME20 SBFCG 0755-0540	HME20 LAFCG 0755-0560	HME20 LBFCG 0755-0570	HME20 MACG 0755-0600	HME20 MBCG 0755-0610	HME20 SACG 0755-0630	HME20 SBCG 0755-0640	HME20 LACG 0755-0660	HME20 LBCG 0755-0670
ITEM	**PART NO.**	**DESCRIPTION**																								
14.	0740-1002	Bleeder Valve	1	1	1	1	1	1	1	1	1	1	1	1	1	1	1	1	1	1	1	1	1	1	1	1
15.	0726-1003	Back Plate	1	1	1	1	1	1	1	1	1	1	1	1	1	1	1	1	1	1	1	1	1	1	1	1
16.	0760-1009	O-Ring, EPR													1	1	1	1	1	1	1	1	1	1	1	1
	0720-1004	O-Ring, Buna-N	1	1	1	1	1	1	1	1	1	1	1	1												
17.	0720-1027	Piston	1	1	1	1	1	1	1	1	1	1	1	1	1	1	1	1	1	1	1	1	1	1	1	1
18.	0720-1024	Puck	2	2	2	2	2	2	2	2	2	2	2	2	2	2	2	2	2	2	2	2	2	2	2	2
19. 20. 21.	0743-9000	Kit: Housing, Stud & Sleeve	1	1	1	1	1	1	1	1	1	1	1	1	1	1	1	1	1	1	1	1	1	1	1	1
22.	0743-1071	Spacer	4	4	4	4	4	4							4	4	4	4	4	4						
23.	0720-1026	Pan Head Screw	2	2	2	2	2	2	2	2	2	2	2	2	2	2	2	2	2	2	2	2	2	2	2	2
24.	0724-1011	Dead Side Housing	1	1	1	1	1	1	1	1	1	1	1	1	1	1	1	1	1	1	1	1	1	1	1	1
25.	0720-1008	Lock Nut	2	2	2	2	2	2	2	2	2	2	2	2	2	2	2	2	2	2	2	2	2	2	2	2
26.	0720-1023	O-Ring, EPR													2	2	2	2	2	2	2	2	2	2	2	2
	1014-1062	O-Ring, Buna-N	2	2	2	2	2	2	2	2	2	2	2	2												
27.	0724-1016	Floating Bracket	1	1	1	1	1	1							1	1	1	1	1	1						
28.	0743-1013	Lever, Cam, 3.50"					1	1					1	1					1	1					1	1
29.	0707-1013	Lever, Cam, 1.75"			1	1					1	1					1	1					1	1		

Installation & Maintenance Instructions

All caliper disc brakes listed in these instructions are designed to operate on hydraulic service and as mechanically applied parking brakes.

HYDRAULIC SERVICE: If the brake model has a letter "G" in its suffix, it contains EPR seals which are compatible ONLY with automotive brake fluid. Otherwise, the brake contains Buna-N rubber seals which are compatible with petroleum-based hydraulic fluids. **THE HME 20 CALIPER DISC BRAKE IS DESIGNED TO OPERATE AT A MAXIMUM PRESSURE OF 1000 PSI.** (68.9 bar)

MECHANICAL SERVICE: There are limits to the maximum lever force which may be applied to the mechanical side of HME 20 Series Caliper Disc Brake. The brake models carry a model designation in the suffix ("S" for the Short or 1.75-inch lever, "M" for the Machined Cam lever and "L" for the Long or 3.5-inch lever).

The maximum lever force which may be applied to ("S" and "M" suffix models is 450 lbf (2,001.7 N). The maximum lever force which may be applied to "L" Suffix models is 225 lbf (1,000.9 N).

INSTALLATION: For models without floating mounting brackets, use two Grade 5 bolts and tighten to 22 ft-lbs (29.83 N-m) of torque. For models with floating mounting brackets, secure the floating mount with 3/8-inch Grade 5 bolts to a sturdy support. These bolts must also be tightened to 22 ft-lbs (29.83 N-m). Care should be taken that the friction puck faces remain parallel to the disc face and that the disc is clean of any dirt or grease.

The proper clearance between the friction pucks and disc should be .010 inch minimum on each side to a maximum of 0.031 inch per side with new friction pucks. Use the Mechanical Adjustment Nut (#3) to set the proper clearance.

Connect the hydraulic pressure supply line to the 1/8-inch NPT fitting and use the Bleeder Valve (#14) to eliminate any trapped air in the line or in the brake housing.

NOTE: The model HME20 Series Brake will bleed best with the brake mounted at the 4 to 5 o'clock position on the disc with the Bleeder Valve (#14) on top.

Once the brake is connected and bled, be certain that all pressure is removed when the brake is off. Residual or back pressure will cause the brake to drag, reduce puck life and cause heat buildup. If the brake is to be used with a master cylinder, be certain that any residual check valves are removed.

ADJUSTMENTS: The only adjustments that will be required will be the mechanical adjustment. The puck clearance should be checked and readjusted if the total clearance exceeds .070 inch (1.78 mm).

Tolomatic™
EXCELLENCE *IN MOTION*

COMPANY WITH QUALITY SYSTEM CERTIFIED BY DNV = ISO 9001 =

3800 County Road 116, Hamel, MN 55340 USA
http://www.Tolomatic.com • Email: Help@Tolomatic.com
Phone: (763) 478-8000 • Fax: (763) 478-8080 • Toll Free: 1-800-328-2174

All brand and product names are trademarks or registered trademarks of their respective owners. Information in this document is believed accurate at time of printing. However, Tolomatic assumes no responsibility for its use or for any errors that may appear in this document. Tolomatic reserves the right to change the design or operation of the equipment described herein and any associated motion products without notice. Information in this document is subject to change without notice.